COFFEE CRAFTERS LLC · POST FALLS, IDAHO

ARTISAN XE

by Coffee Crafters

LEGACY MODEL · DISCONTINUED

Updated owner's manual with current safety, venting, and cleaning guidance

10-lb Fluid Bed Coffee Roaster **Owner's Manual**

708 S Clearwater Loop, Suite 105 · Post Falls, ID 83854
www.coffeecrafters.com · (509) 228-6916 · info@coffeecrafters.com
Copyright © 2026 Coffee Crafters LLC · All Rights Reserved · Legacy Edition

CONTENTS

1 Introduction ... 3
- About This Manual ... 3
- What Has Changed from the Original Manual ... 3
- Important Safety Information ... 4

2 Support for Discontinued Roasters ... 6
- Warranty Coverage ... 6
- Replacement Parts ... 6
- If You Need Service ... 6
- Before First Use: Used or Stored Roasters ... 7

3 Cleaning & Sanitation Guide ... 8
- Food Equipment Sanitation & Your Health Department ... 8
- Roast Hopper & Chaff Guard ... 9
- Bean Cooling Tray ... 9
- Chaff Canister, Bags & Exhaust Ductwork ... 10
- Green Bean Hopper & Loader ... 11
- Cleaning Log ... 12

4 What to Do If You Have a Fire ... 13
- Emergency Procedure ... 13
- After a Fire ... 13

5 Specifications ... 14

6 Assembly & Installation ... 15
- Assembly Introduction ... 15
- Choosing a Location ... 15
- Hardware Packages ... 15
- Installing the Roaster Hopper Support ... 16
- Installing the Hood Support Mast ... 16
- Installing the Hopper ... 17
- Installing the Chaff Guard ... 18
- Thermometer ... 18
- Installing Conduit and Cord Routing ... 20
- Installing the Exhaust Blower ... 20
- Connecting the Exhaust Ducting ... 21
- Ventilation Installation ... 22
- Light Kit Installation ... 24
- Temperature Switch ... 25

7 Roasting ... 27
- Roast Coffee in 6 Easy Steps ... 27
- Step 1 — Check the Chaff Bag ... 27
- Step 2 — Turn On the Exhaust Blower ... 27
- Step 3 — Load Beans in the Hopper ... 28
- Step 4 — Turn On the System Power Switch ... 28
- Step 5 — Set the Bean Loft ... 29
- Step 6 — Turn On the Heating Elements ... 30
- Roasting Complete: Cooling the Beans ... 31

8 Coffee Bean Education ... 33
- Proper Storage of Green Coffee Beans ... 33

9 Maintenance & Troubleshooting ... 34
- Maintenance ... 34
- Troubleshooting Guide ... 37
- Figures ... 39
- Wiring Diagrams ... 42
- Part List ... 44

SECTION 1

Introduction

About This Manual

The Artisan Xe is a discontinued Coffee Crafters roaster. We no longer build or sell new Artisan roasters, but many are still roasting coffee every day, and we continue to support the people who own them.

This manual is written for two kinds of owners: customers who bought their Artisan Xe new and want the most up-to-date guidance, and owners who bought their roaster used and may never have received a manual at all. Either way, this is the current reference for operating, cleaning, and maintaining your roaster.

What Has Changed from the Original Manual

This edition keeps the original assembly, roasting, and troubleshooting instructions and adds the safety guidance we now publish for our current roasters:

- **Cleaning & Sanitation Guide (Section 3)** — component-by-component cleaning procedures, frequencies, and a cleaning log that supports a written sanitation program or a health department request.
- **What to Do If You Have a Fire (Section 4)** — a step-by-step emergency procedure. Read it before you roast.
- **Rigid ducting only.** Earlier manuals allowed flexible aluminum hose in parts of the exhaust system. We now require rigid metal ducting for every exhaust connection.
- **Safety messages.** Warnings and cautions now follow the ANSI Z535 format, explained in Important Safety Information at the end of this section.
- **Removed content.** Shipping, new-purchase return, and new-roaster warranty information no longer applies to this model and has been removed. See Section 2 for current support.

Getting Help

Our team has supported Artisan owners since the first Artisan shipped in 2012. If something in this manual does not match your roaster, or you run into a problem the troubleshooting guide does not cover, contact us — have your serial number ready.

NOTE	Phone: (509) 228-6916 · Email: info@coffeecrafters.com · YouTube: Coffee Crafters LLC

If you are thinking about expanding your roasting operation, our current Valenta line of all-electric fluid bed roasters is the successor to the Artisan. Visit www.coffeecrafters.com for details.

Important Safety Information

Read this entire manual before installing or using your Artisan Xe, and keep it near the roaster for anyone who operates it. Coffee roasting uses high heat and produces chaff, smoke, and oils that can catch fire. Following these instructions keeps you, your space, and your roaster safe.

Safety Messages in This Manual

Safety messages in this manual follow the ANSI Z535 format. The ⚠ safety alert symbol means a personal injury hazard. Obey every safety message that follows this symbol.

⚠ DANGER	Indicates a hazardous situation that will result in death or serious injury if not avoided.
⚠ WARNING	Indicates a hazardous situation that could result in death or serious injury if not avoided.
⚠ CAUTION	Indicates a hazardous situation that could result in minor or moderate injury if not avoided.
NOTICE	Indicates information about preventing damage to the roaster or your property. No personal injury hazard.
SAFETY INSTRUCTIONS	Indicates steps or procedures for safe operation.

Key Hazards

⚠ WARNING	**Fire hazard.** Beans, chaff, and roasting oils can ignite. A fire can spread into the exhaust ducting and the building. • Never leave the roaster unattended while it is on. • Always run the exhaust blower whenever the roaster is on. Never roast with the blower off. • Empty the chaff bags before they are half full. • Clean the exhaust ducting at least once a year, and more often with heavy use. • Keep a fire extinguisher rated for the space within reach whenever the roaster is running. • Know the fire procedure in Section 4 before your first roast.

⚠ WARNING	**Electric shock hazard.** This roaster runs on high-voltage power. Contact with live parts can kill. • Have a licensed electrician install the circuit, receptacle, or hardwired connection to local electrical code. • Use only a properly grounded supply that matches the Specifications in this manual. • Turn off and unplug the roaster, or switch off its breaker, before cleaning, servicing, or opening any panel.

⚠ **WARNING**	**Exhaust hazard.** Roasting smoke contains carbon monoxide and other combustion byproducts. • Vent the exhaust outdoors through rigid metal ducting as described in Assembly & Installation. • Never vent into a room, attic, crawl space, or another building exhaust system. • Follow your local mechanical and fire codes (see Exhaust & Ventilation Codes in Section 6).

⚠ **CAUTION**	**Burn hazard.** The roast hopper, hood, exhaust parts, and freshly roasted beans get hot enough to burn skin. • Do not touch hot surfaces during or right after roasting. • Always wear heat-resistant gloves when handling the hopper. • Let the roaster cool before cleaning. • Keep children and pets away from the roaster while it is in use or cooling.

NOTICE	Use the roaster only for roasting coffee beans. Do not modify the roaster or bypass any of its safety features. Using parts other than Coffee Crafters replacement parts can damage the roaster.

SECTION 2

Support for Discontinued Roasters

Warranty Coverage

New Artisan Xe roasters purchased directly from Coffee Crafters were covered by a one-year limited warranty from the original purchase date. That warranty applied to the original purchaser only and does not transfer, so roasters purchased used are not covered. The original 30-day money-back guarantee and return process applied to new purchases only and no longer apply to this model.

Replacement Parts

We still stock many Artisan Xe replacement parts. Because this model is discontinued, some parts may be limited, replaced by a newer equivalent, or no longer available. Call or email us before ordering so we can confirm what fits your roaster.

If You Need Service

- Start with the Maintenance & Troubleshooting section of this manual (Section 9).
- Visit the Coffee Crafters YouTube channel for maintenance and troubleshooting videos.
- If you are still having trouble, call (509) 228-6916 or email info@coffeecrafters.com and we will work through it with you.

Before First Use: Used or Stored Roasters

If you bought your roaster used, moved it, or are bringing it back into service after it has sat unused, inspect it before your first roast. A previous owner's installation, old chaff bags, and dirty ductwork are the most common sources of problems — and of fires.

⚠ WARNING	**Do not roast on a used or long-stored roaster until it has been inspected. Chaff and oil left in the hopper, chaff collection system, or ductwork are combustible.**

- Have a licensed electrician confirm the roaster is on a correctly sized, dedicated circuit (60-amp, 240V) and inspect the connections at the power distribution block and the power cord.
- Replace or thoroughly wash every chaff bag. Empty and vacuum the chaff collection system.
- Clean or replace the entire exhaust run. Replace any flexible aluminum hose with rigid metal ducting (see Section 6).
- Wash the hopper, chaff guard, and bean cooling tray (see Section 3).
- Confirm the exhaust blower runs and pulls strong suction at the hood and bean cooler.
- Check that the thermometer powers on and the probe is positioned correctly.
- With the heating element OFF, turn on system power and confirm the bean loft motor responds smoothly across its full range.
- Run a small first batch and stay with the roaster the entire time.

NOTE	The components that came with the Artisan Xe changed several times over the years. If your roaster is missing a part shown in this manual, or has a part that is not shown, contact us with your serial number.

SECTION 3

Cleaning & Sanitation Guide

Cleaning Introduction

This guide provides manufacturer-recommended cleaning and sanitation procedures for Coffee Crafters fluid bed air roasting systems. It covers the roast hopper, bean cooling tray, chaff handling components, and associated bean-handling surfaces. It is intended to support a customer's written sanitation program and to respond to a local health department's request for equipment-specific cleaning guidance.

Food Equipment Sanitation & Your Health Department

If you roast for a coffee shop, café, or other licensed food business, your local health department may review your roaster before you open or during an inspection. Here is what they usually ask for.

NSF certification. Coffee Crafters roasters, including the Artisan Xe, are not certified to NSF/ANSI 4 or any other NSF food-equipment standard. Many health departments follow the FDA Food Code, which treats equipment certified by an ANSI-accredited program as automatically acceptable. Equipment without that certification can still be approved, but the inspector may review how it is built and cleaned. Ask your health department early, before you finalize your plan review.

What to give your inspector:

- This manual, especially this Cleaning & Sanitation Guide and its Cleaning Log.
- **Food-contact materials:** roast hopper — 304 stainless steel; bean cooling tray — 304 stainless steel; green bean hopper — 304 stainless steel.
- **Electrical safety listing:** UL and cUL listed, UL File No. 139055, as shown on the roaster’s data plate.
- **Your cleaning schedule:** how often you clean depends on how much and how often you roast. Use the frequency listed for each component in this guide and adjust it to your roasting volume.

Good practice for a food business:

- Keep green coffee storage, roasting, and packaging areas clean and separate from chemicals.
- Use only food-safe cleaners on food-contact surfaces, and rinse as directed.
- Keep the Cleaning Log current. It is the easiest way to show an inspector your routine.

General Safety Precautions

- Always power down, unplug or lock out, and allow the unit to cool to a safe handling temperature before removing the hopper or opening any panel, tray, or collector.
- Never spray water or use wet cleaning methods on the control panel, motor housing, heating element, or other electrical components.
- Use a HEPA-filtered vacuum or dry brushing for chaff and dust removal — avoid compressed air, which aerosolizes fine combustible dust.
- Do not use chlorinated cleaners, steel wool, or abrasive pads on the hopper interior or cooling tray screen; these can damage surfaces and leave residue that affects roast flavor.
- Wear appropriate PPE (gloves, eye protection, and a dust mask/respirator when cleaning chaff collection areas) per your facility's safety program.

Procedures by Component

Roast Hopper & Chaff Guard

Why it matters

The Artisan Xe's fluid bed design suspends beans in a high-velocity heated air stream rather than tumbling them in a drum, and that air stream carries most chaff out of the hopper during the roast. What the hopper does accumulate is a film of roasted-bean oil and fines on the hopper walls, the chaff guard, and the air openings at the bottom of the hopper. That buildup gradually changes airflow and heat transfer, which shows up first as roast-to-roast drift (batch times or profiles no longer matching) before it becomes a housekeeping problem.

Frequency

Because the hopper removes from the roaster without tools, it can be cleaned far more often than a fixed roast chamber. Wash the hopper and chaff guard at least weekly during regular use, and sooner whenever you see oil film building up or notice roast times drifting. Darker roasts build up residue faster.

Procedure

- Power down and allow the roaster and hopper to cool to a safe handling temperature.
- Remove the thermometer from its bracket and set the thermometer and probe aside.
- Remove the hopper: rotate the hopper 90° to the left, lift it slightly, and pull it toward you. It is easier if you look behind the hopper to see the key rotate into the removal position.
- Remove the chaff guard from the hopper.
- Dry-brush loose chaff and fines from all surfaces, then wash the hopper and chaff guard in hot water and dish soap. For heavier buildup, soak in hot water with Cafiza (a food-grade espresso machine cleaner) and scrub with a plastic dish brush.
- Use a soft brush on the chaff guard — its edges and the thermometer probe bracket can cut you.
- Inspect the air openings at the bottom of the hopper for blocked holes and clear them.
- Rinse and dry completely. Do not let any water drip into the roast air chimney or heat chamber.
- Reinstall the chaff guard and hopper, remount the thermometer, and reset the probe.

Tools & materials

Dry brush, plastic dish brush, lint-free cloths, dish soap or Cafiza, food-equipment-safe degreaser (non-chlorinated).

Cautions

- Never reinstall a wet hopper — water in the roast air chimney can damage the heating element.
- Track cleanings in the cleaning log at the end of this section so the schedule doesn't rely on memory alone.

Bean Cooling Tray

Why it matters

This is the highest-priority food-contact surface in the system: beans land here immediately after roasting with no further heat treatment, and the screen accumulates chaff dust, bean fragments, and potential insect activity.

Frequency

Brush or vacuum chaff after every batch or at end of shift, whichever is more frequent. Full wash-down of the tray and screen daily during operation.

Procedure

- Power down and allow the tray to cool.
- Remove loose chaff and fines with a HEPA-filtered vacuum or brush.
- Remove the tray and wash with warm water and a food-safe detergent; rinse and air-dry completely before reinstalling.
- Wipe the tray surface with a food-safe sanitizing solution; allow to air-dry.
- Vacuum the cooling void beneath the tray for fallen beans and chaff, then wipe it with a damp cloth.

Tools & materials

HEPA vacuum, food-safe detergent, food-contact-surface sanitizer, lint-free cloths.

Chaff Canister, Bags & Exhaust Ductwork

Why it matters

In a fluid bed roaster, this is where most chaff actually ends up — the air stream carries it out of the hopper continuously during the roast. On the Artisan Xe that means the stand-alone chaff canister and its filter bags. It's not a food-contact surface, but chaff and fine dust here are a combustion hazard and a pest attractant, and a partially blocked canister, bag, or duct can itself become the airflow problem that shows up as roast drift.

Frequency

Inspect the chaff bag every time you roast; suction drops off once it is more than about half full. Empty the bag every 5-6 roasts. Inspect and clean the canister interior and duct joints as needed.

Procedure

- Confirm the system is powered down and cool before opening the canister.
- Empty the chaff bag into a covered, non-combustible container; dispose of per local fire code.
- Vacuum or brush accumulated chaff from the canister interior and accessible duct sections once the bag is removed.
- Wash dirty bags with mild detergent and air-dry them fully before reuse; replace bags that stay coated in chaff dust after washing.
- Inspect duct joints and seals for chaff accumulation and leaks; clean and reseal as needed.

Tools & materials

HEPA vacuum, brush, covered non-combustible waste container, spare chaff bags.

CAUTION: CHAFF IS A FIRE HAZARD

⚠ **WARNING**

Chaff is combustible. Never use compressed air to clean chaff, and keep collected chaff away from all ignition sources.

Follow your local fire marshal's requirements for chaff and dust disposal frequency if applicable.

Green Bean Hopper & Loader

Why it matters

Holds raw (unroasted) green beans, which carry field and warehouse dust and occasional foreign material. Beans are not heat-treated at this stage, so good housekeeping here prevents contamination from carrying into the roast.

Frequency

Visual inspection before each load; full wipe-down and debris removal weekly.

Procedure

- Empty the green bean hopper and remove any dust, chaff, or foreign material (stones, twigs) from the bottom and walls.
- Wipe interior surfaces with a dry cloth; use a lightly dampened food-safe cloth for dust film, then dry completely before reloading beans.
- Check the loading gate and bean loader for residue buildup and clear as needed.

Cleaning Log

Date	Component	Performed by	Observations / corrective action

Notes

- This guide is manufacturer guidance and a starting point — the operator's food safety and sanitation program should ultimately be reviewed and finalized with the local health authority.
- Adjust frequencies upward for high-volume operations or when roasting particularly oily or dark profiles, which accelerate residue buildup.

SECTION 4

What to Do If You Have a Fire

Fires in a coffee roaster are rare, but they can happen — most often when chaff is allowed to build up in the chaff canister, the bags, the ducting, or around the roaster, or when beans stop circulating in the hopper. Read this page before your first roast so you already know the order of these steps. In an emergency you will not have time to look them up.

⚠ WARNING	**Follow these steps in order. Turning the exhaust blower off FIRST is what stops the fire from spreading — every other step depends on it.**

Emergency Procedure

1. Turn off the exhaust blower first.

The blower pulls air through the roaster and the ductwork. Leaving it running feeds the fire with oxygen and pushes flames and embers down the exhaust run. Shut it off before you do anything else.

2. Put on heat-resistant gloves and dump the beans out of the hopper.

Getting the burning beans out of the hopper removes the fuel. Wearing safety gloves, remove the hopper (rotate it 90° to the left, lift slightly, and pull it toward you) and dump the beans into a sink or a bucket of water. Dumping the beans into the bean cooler should only be a last resort. Then turn off the heating element and system power switches.

⚠ CAUTION	Never pour water onto or into the roaster itself. Only put water on beans that have already been removed from the roaster.

3. Turn off the breaker.

Cut power to the roaster at the breaker panel. This removes the ignition source and makes the machine safe to approach.

4. If you cannot safely dump the beans, use a fire extinguisher.

If the hopper is too hot or the fire is too large to handle safely, or if the fire has not gone out once the airflow, fuel, and power are removed, use a fire extinguisher rated for the space. Keep one within reach of the roaster at all times.

5. Call the fire department if needed.

If the fire is spreading, has moved into the ductwork or the building structure, or you cannot put it out quickly, get clear and call the fire department. Do not stay to fight a fire you are not able to control.

After a Fire

Do not roast again until the roaster, the chaff canister, and the entire exhaust run have been inspected. Fire commonly travels into the ducting, and damage there is not always visible from the roasting area. Contact Coffee Crafters before returning the machine to service so we can help you check it over.

SECTION 5

Specifications

MAX BATCH	ROAST TIME	ROASTER HEAT
10 lbs	8–14 min	10,400 W

The Artisan Xe is a complete roasting, bean-cooling, and chaff collection system. Specifications below are from the original Artisan Xe specification sheet.

PERFORMANCE	
Batch Size	2 lbs to 10 lbs
Roast Time	8–14 minutes (manually adjustable)
Roast Air Temperature	Variable manual control (Fahrenheit or Celsius)
Bean Temperature	Digital thermometer
Bean Cooling	External cooler, 10 lb capacity
Chaff Collection	Stand-alone chaff canister filter system

POWER & VENTING	
Roaster Power	60-amp, 240V single phase, dedicated circuit
Roaster Heat	10,400 watts
Exhaust System Power	11-amp, 230V 60 Hz single phase
Electricity Usage	0.4 kWh per pound (full 10 lb load) 1.0 kWh per pound (2 lb load)
Venting	Intake: 4″ rigid metal ducting Discharge: 4″, 5″, or 6″ rigid metal ducting (customer supplied)

DIMENSIONS	
Minimum Floor Space (full system)	7′ wide × 3′ deep
Roaster Overall Height	61.25″
Exhaust Blower	1,550 CFM · 16.25″ wide × 19″ deep × 19.75″ tall

CERTIFICATIONS	
Listings (as originally certified)	UL · cUL

SECTION 6

Assembly & Installation

Assembly Introduction

The Artisan Xe shipped mostly assembled. Use this section to set up a roaster for the first time, or to reinstall one that has been moved or purchased used.

Roaster

Accessory kit (original)

Choosing a Location

Select a suitable location for the roaster and blower system before you begin. The blower system can be installed anywhere within 10 feet of the roaster, including on the other side of a wall, which some owners prefer if noise is a concern. If you place the blower farther away, additional duct and fittings will be required. Check your local codes for venting requirements (see Ventilation Installation later in this section).

You will need to supply **rigid metal ducting** for every exhaust connection — 4-inch rigid duct from the roaster, chaff collector, and bean cooler to the blower, and 4-, 5-, or 6-inch rigid duct from the blower discharge to the outside — plus the electrical cord or conduit for the roaster and a plug for the blower.

⚠ **CAUTION**	The roaster must be positioned on a flat, smooth surface — do not install on carpet. Leave at least a 6-inch gap between the back vent pipes and the wall.

NOTE	When correctly installed, the exhaust gas temperature will not exceed 170°F.

Hardware Packages

The Artisan Xe originally shipped with the fittings and hardware needed to install the chaff collector, roaster, bean cooler, and exhaust blower, packed in one bag taped to the hopper support mast.

NOTE	The items included with the Artisan Xe changed many times over the years. The components shown here reflect one version of the original kit and may not match what came with your roaster. If you are missing a part, contact us with your serial number.

Component	Hardware
1. Hopper support mount	(6) 8-32 × ⅜″ screws
2. Mast hardware kit	(1) carriage bolt, washer, and wing nut · (2) #10 keps nuts · (1) aluminum spacer
3. Hopper thermometer mount	(1) small zip tie, (1) sticky mount block

Installing the Roaster Hopper Support

Install the hopper mount and mount base using the six 8-32 × ⅜″ stainless screws from the hardware kit.

NOTICE	Do not remove or adjust the hopper mount plate. It is factory adjusted to ensure a proper seal between your hopper and the roast air chimney. Remove the warning sticker after installation.

Installing the Hood Support Mast

1. Install the 2¼″ × ¼-20 carriage bolt (Item D) through the roaster hopper support and slide the spacer (Item G) over the carriage bolt.
2. Slide the mast (Item B) over the two protruding studs on the back of the roaster (Item A) and over the carriage bolt. Secure the studs with two 10-32 keps nuts (Item C), finger tight only.

3. Reach inside the exhaust mast and attach the washer and wing nut (Items E & F) to the carriage bolt. Hand tighten.

Installing the Hopper

Once the mast and hood are attached, you are ready to mount the hopper on the hopper mount support.

1. With a paper towel and silicone lubricant (if included), spray a thin, even layer of silicone on the face plate, catching the drips.
2. Spray the metal hopper key and disc on the back of the hopper the same way.
3. Facing the hopper mount, hold the hopper with both hands turned to your left. Line up the hopper key with the keyhole on the back of the hopper mount plate.
4. Once the key is inserted, let the hopper slide downward and turn it to the right into an upright position, lifting slightly to seat it on the roast chimney.

Installing the Chaff Guard

1. Remove the screw, washer, and keps nut from the back edge of the chaff ring and set them aside.
2. Facing the hopper, hold the chaff guard with the small tab and hole on the left. Tabs under the rim grip the edge of the hopper once in position.
3. Starting from the front of the hopper, slide the back edge of the chaff guard over the front edge of the hopper and push it fully onto the top of the hopper, with the small tab near the left handle.
4. Reinstall the screw, washer, and nut in the hole at the back of the chaff guard, with the washer below the hopper rim, and tighten.

Thermometer

Your thermometer mounts on the thermometer bracket above the left handle. Several thermometer models shipped with the Artisan Xe over the years, so yours may look different from the one shown. On the model pictured, the meter powers down after 30 minutes with no key presses; to disable auto-off, press and hold the "H" and "Power" keys at the same time. Replace the battery when the low battery symbol appears.

Mounting the Thermometer Bracket to the Chaff Guard

1. Attach the bracket to the chaff guard with the 8-32 × ⅜″ screw and keps nut.
2. Peel the backing off the thermometer's Velcro strips.
3. Press the thermometer firmly onto the bracket.
4. Attach the cable guide to the back of the bracket.

Attaching the Thermocouple Probe

1. Bring the wire behind the thermometer and plug it into the bottom of the thermometer, making sure it goes into the correct slots.
2. Secure the thermocouple wire to the back of the thermometer bracket with the post and tie wrap provided.

Installing Conduit and Cord Routing

Install the electrical cord or rigid conduit to the power distribution block on the back of the roaster. For a rigid conduit connection, remove the cord grip and install the proper conduit connector.

Power distribution block: Line 1, Neutral, Ground, Line 2

NOTE	We recommend installing a pigtail and plug so the roaster is easier to move for cleaning.

⚠ **WARNING**	**Improper electrical installation is a fire and shock hazard. This connection must be made by a licensed electrician on a correctly sized dedicated 60-amp, 240V circuit. Loose or undersized wiring at the power distribution block can overheat and start a fire — do not operate the roaster until the connection has been inspected and confirmed correct.**

Installing the Exhaust Blower

1. Attach the correct electrical plug for your outlet to the blower cord.

2. Place the 6×4×4 wye on the intake side of the blower, positioned to best suit your duct runs. Secure it with the self-tapping screw provided.
3. The blower has a 5″ flange on its top discharge outlet. Run **4-, 5-, or 6-inch rigid metal ducting** from this flange to the outside, using a reducer or increaser as needed. For runs of 20 feet or longer, we recommend 4″ rigid duct to increase air velocity to the discharge point.
4. Seal every duct joint and seam on the discharge side of the blower with high-temperature tape. The discharge ducts are under pressure and will leak smoke into the roasting area if not sealed.
5. To reduce noise, install the blower under an insulated enclosure or on the other side of a wall. The blower motor is air-cooled, so never seal it in completely without an intake air source.

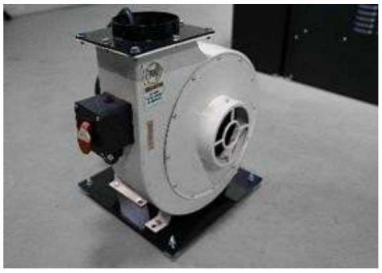

Connecting the Exhaust Ducting

Connect each of the three runs below with **4-inch rigid metal duct** and fittings, secured with 4″ hose clamps, sized to suit your roaster layout. Make sure each duct is seated completely over its flange before tightening the clamp.

Run	Connection
A	Mast to chaff collector top
B	Chaff collector lower outlet to blower wye
D	Bean cooler to blower wye

NOTE	This photo shows the flexible aluminum hose that originally shipped with the roaster. We now recommend rigid metal ducting for every exhaust connection.

Ventilation Installation

The Artisan Xe must be exhausted in accordance with the manufacturer's instructions in this manual. The roaster exhaust system must be independent of all other systems.

Exhaust & Ventilation Codes

⚠ **WARNING**	**Fire hazard.** An exhaust system that is installed incorrectly or not kept clean can carry a roaster fire into walls, ceilings, and the rest of the building. Install and maintain your exhaust system to these instructions and to every code that applies where you roast.

The instructions in this manual are the minimum for safe operation. Your local codes may require more. Before you install, contact your local building department or fire marshal, called the Authority Having Jurisdiction (AHJ). The AHJ decides which codes apply to your roaster and whether you need a permit or inspection.

Codes your AHJ may apply include:

- NFPA 96, Standard for Ventilation Control and Fire Protection of Commercial Cooking Operations (current edition 2024). This is the main U.S. fire standard for commercial cooking exhaust ducts, fans, and clearances, and some jurisdictions apply it to coffee roasting.
- Your local mechanical code, usually the International Mechanical Code (IMC) or Uniform Mechanical Code (UMC) as adopted by your state or city.
- Your local fire code, usually the International Fire Code (IFC) or NFPA 1.
- The International Building Code (IBC) for any duct that passes through a fire-rated wall, floor, or ceiling.
- Your regional air quality agency. Some agencies require a permit or registration for coffee roasters, depending on batch size and pounds roasted per day.

Whatever codes apply, these rules always do:

1. Vent the roaster exhaust outdoors — never into a room, attic, crawl space, chimney, or another exhaust system.
2. Keep the roaster exhaust system completely separate from any other ventilation or exhaust system.
3. Use rigid metal ducting only, as listed for your model, and seal all joints on the pressurized discharge side.
4. Keep ducting away from combustible materials, or use the clearance or protection your AHJ requires.
5. Provide cleanout access along the full duct run, from the blower discharge to the outside termination.
6. Inspect and clean the ductwork at least once a year, and more often with heavy use. Record each cleaning in the Cleaning Log.

In a commercial building, have a licensed mechanical contractor design and install the exhaust system, and tell your landlord and insurer before you install.

Exhaust Penetrations

Any wall or ceiling penetration of ducts that carry roaster exhaust must meet the International Building Code fire-resistance rating and cannot be located within any fire-blocking or draft-stopping areas — unless the ductwork is constructed of galvanized steel or aluminum of a thickness specified in Section 603.3 of the International Building Code and the fire-resistance rating is maintained.

- Fire-blocking prevents movement of flame, smoke, and gases through concealed spaces — primarily vertical movement.
- Draft-stopping prevents movement of smoke and gases through concealed spaces — primarily horizontal movement.

Cleanout

All ducting from the blower discharge to the outlet terminal must have a means for cleanout. Exhaust duct cleaning is required for all coffee roasting installations. Inspect exhaust ducting frequently; clean or replace if excessive buildup is present.

Maximum Run Lengths

- Use rigid metal ducting (4, 5, or 6 inch). The run from the exhaust blower to the outlet terminal must not exceed 50 feet.
- Deduct 2½ feet for every 45° bend and 5 feet for every 90° bend. Example: a run with two 45° bends has a maximum length of 45 feet.

Ducting

- Use ONLY rigid metal ducting — from the roaster and bean cooler to the blower intake, and from the blower discharge to the outlet terminal.
- Do not use flexible aluminum hose, plastic dryer ducting, or aluminum flex duct with a plastic liner anywhere in the exhaust system.
- Tape every joint and seam on the discharge side of the blower with high-temperature foil tape. That part of the system is pressurized and will leak smoke into the roasting area through open seams.

⚠ **CAUTION**	The exhaust gas temperature must not exceed 170°F (76.6°C).

Light Kit Installation

Remove the plastic sheath from the light and place its magnetic base on the bracket attached to the mast. Position the light as shown for the best view inside the hopper. Plug the light cord into the back of the roaster; the system power switch must be on for the light to receive power, and the inline switch turns the light on and off.

⚠ **CAUTION**	Do not put the light through the hole in the hopper — the heat will melt the light.

Temperature Switch

The following information originates from the manufacturer, LOVE.

Bulletin E-90-TCS

LOVE

Series TCS Thermocouple Switch

Specifications - Installation and Operating Instructions

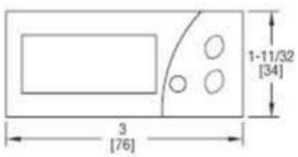

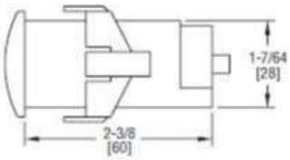

Monitor and control temperature in heating and cooling applications with the Series TCS Thermocouple Switch. The Series TCS offers a wide temperature range, two selectable alarm sets, and an internal buzzer indicating alarm condition or error. The user can define set point, heating/cooling regulation, cycle time, alarm configuration, load status, and ambient probe adjustment. The thermocouple switch features password protection and error/alarm messaging. Temperature and output status is indicated on the bright red LED display. Use the configuration key (sold separately) to quickly program multiple units. The Series TCS includes a fitting clip for panel mounting, gasket, rear terminal cover and instruction manual.

INSTALLATION

Note: Unit must be mounted away from vibration, impacts, water and corrosive gases.

- Cut hole in panel 2.80 x 1.14 inches (71 x 29 mm).
- Apply silicone (or rubber gasket) around the perimeter of the hole to prevent leakage.
- Insert unit into hole of panel.
- Slide removable fitting clips onto unit from the back until secure to panel.
- Remove back cover to wire unit.
- Wiring diagram is displayed on the top of the unit.
- (Note: PROBE CABLE LENGTH MUST NOT EXCEED 238 ft (100 m). DO NOT INSTALL PROBE CABLE NEAR POWER CABLES).
- Replace cover once wiring is complete.

SPECIFICATIONS

Probe Range: 32 to 999°F (0 to 700°C) for Type J thermocouple; 32 to 999°F (0 to 999°C) for Type K or S thermocouples.
Input: Type J, K or S thermocouple.
Output: SPDT relay rated 16A @ 240 VAC resistive.
Horsepower Rating (HP): 1 HP.
Control Type: ON/OFF.
Power Requirements: 115 VAC, 230 VAC, 12 VAC/VDC or 24 VAC/VDC (depending on model).
Accuracy: ±1% FS.
Display: 3-digit, red, 1/2" (12.7 mm) digits, plus sign.
Resolution: 1°.
Memory Backup: Nonvolatile memory.
Temperature Limits:
Ambient: 32 to 158°F (0 to 70°C);
Storage Temperature: -4 to 176°F (-20 to 80°C).
Weight: 2.3 oz (65 g).
Front Panel Rating: IP64.
Agency Approvals: CE, cUR, UR.

WIRING DIAGRAM

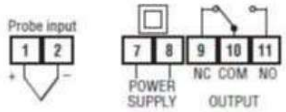

©Copyright 2014 Dwyer Instruments, Inc.
Printed in U.S.A. 2/14
FR# R0-443801-00 Rev.1

LOVE CONTROLS DIVISION
DWYER INSTRUMENTS INC.
P.O. BOX 338 - MICHIGAN CITY, INDIANA 46360, U.S.A.

Phone: 219/879-8000 www.love-controls.com
Fax: 219/872-9057 e-mail:love@love-controls.com

Helpful Tips

- Wash and completely dry the hopper and bean cooling tray before first use. See the Cleaning & Sanitation Guide (Section 3).
- Your roaster does not require preheating.
- Visit www.coffeecrafters.com for roasting tips and more, or scan these codes to watch videos from your phone:

Roasting tips

Roasting on the Artisan Xe

READY	You are now ready to roast. Proceed to the Roasting section for initial testing and roasting instructions.

SECTION 7

Roasting

Before roasting your first batch, orient yourself with proper safety procedures. Treat your roaster the same way you would a cook-top range. During the roast, the hopper gets as hot as any pot on your stove, and the air that roasts your coffee reaches temperatures over 500°F.

⚠ WARNING	**Coffee roasting produces heat, chaff dust, and hot oil residue — all fire risks if the equipment is misused or poorly maintained. Keep the area around the roaster clear of combustible materials, never operate in an enclosed space without proper ventilation, and keep a fire extinguisher rated for the space nearby whenever the roaster is running.**

⚠ WARNING	**Never leave your roaster unattended while roasting. If you lose your bean loft, you will ruin your batch and may damage the roaster. Coffee beans can catch fire if they stop circulating.**

Roast Coffee in 6 Easy Steps

1. Check the chaff bag
2. Turn on the exhaust blower
3. Load beans into the hopper through the hood with the bean loader
4. Turn on the system power switch
5. Set the bean loft
6. Turn on the heating elements

Step 1 — Check the Chaff Bag

Make sure the chaff bag is secured in place and less than 50% full before roasting.

⚠ WARNING	**Chaff bags can catch fire when they are allowed to fill with chaff dust or are not cleaned regularly. A clogged bag also restricts airflow, which drives exhaust temperatures up. Inspect the bag every time you roast, empty it before it reaches half full, and replace any bag that stays coated in dust after washing.**

Step 2 — Turn On the Exhaust Blower

The on/off switch is on the front or side of the blower motor. The blower keeps the machine cool, directs suction through the hood so chaff does not escape, and prevents chaff, smoke, and heat from venting into your roast area.

⚠ WARNING	**Do not operate your roaster without the exhaust blower running. Running without the blower allows heat, smoke, and chaff to build up in the roaster and the roasting area, and is a fire hazard.**

NOTE	If you are roasting in a cold room, preheat the air before your first load: set the loft to 3 and the heat to 10 and leave it there until the roast air temperature reaches 400°F (about one minute).

Step 3 — Load Beans in the Hopper

Make sure the bean loft is turned all the way down, then pour the beans into the hopper through the hood using the green bean loader. A 2-gallon food-grade bucket works well for pouring and holds 10 lbs of green beans.

Step 4 — Turn On the System Power Switch

The system power switch is the single red switch on the left. Never turn on system power until the bean loft knob is turned all the way to LOW — this prevents beans from being blown out of the hopper. As a safety feature, the heating elements cannot be turned on while the system power switch is off.

Step 5 — Set the Bean Loft

The bean loft knob is marked LOW to HIGH. Slowly turn up the air by rotating the knob clockwise. Practice several times before turning on the heat so you become familiar with the feel of lofting beans. Set the loft **3–5 inches above the bean bed**.

⚠ **WARNING**	**Coffee beans must keep moving at all times. Never turn on the heating element until the bean loft is established, and never allow the beans to stop circulating while the heating element is on — beans that stall against hot surfaces will scorch and can catch fire.**

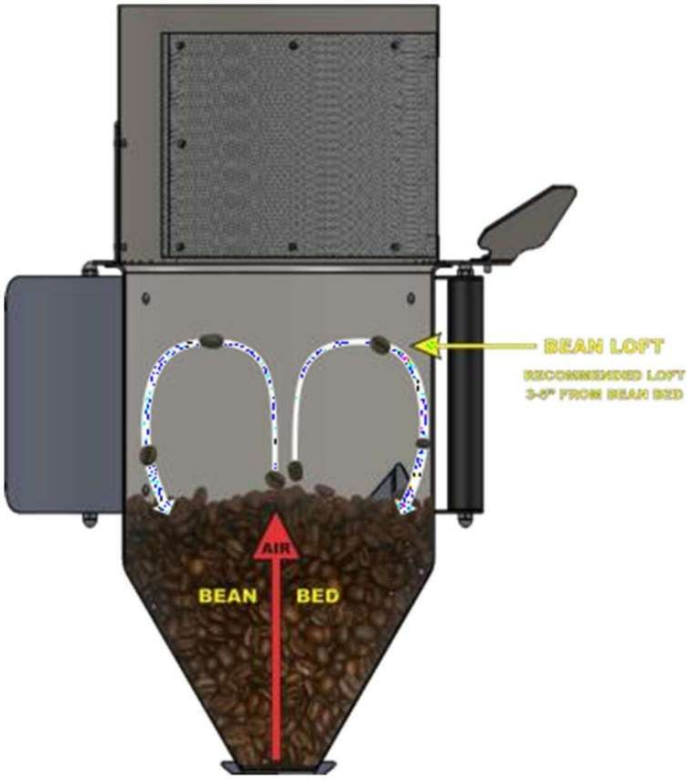

Recommended loft: 3–5" above the bean bed

⚠ **WARNING**	**In the event of a loft motor failure (including a complete power outage), immediately turn OFF the heating element and system power, then — wearing heat-resistant gloves — remove the hopper (rotate it 90° to the left, lift slightly, and pull it toward you) and dump the beans into the bean cooler.**

Step 6 — Turn On the Heating Elements

1. Turn on the heating elements switch (#1).
2. Use the heat adjustment knob (1 to 10) below the temperature controller (#2) to set the heat for your batch size.
3. Readjust the bean loft (#3) if needed — the loft sometimes drops after the heat switch is turned on.

Roasting Recommendations

Batch Size	Heat Setting
2 lbs	3.5 to 4
3–4 lbs	5 to 5.5
5–7 lbs	6 to 7.5 (warm)
8–10 lbs	8 to 10

NOTE	These are recommendations only and vary with altitude, humidity, line voltage, and ambient air temperature. If roasting below a 2 lb batch, the bean temperature may not read accurately.

As the roast progresses, the bean loft rises because the beans double in size and get lighter. Progressively turn down the loft to maintain 3–5 inches above the bean bed. Increase or decrease the heat setting to reach the temperature you need.

Roasting times vary with room temperature and whether the machine is warm or cold. Always monitor the batch and watch the bean temperature to achieve your desired roast. For roasting with the Hermetheus Dual Control (AUTO), see its separate instructions.

Roasting Complete: Cooling the Beans

Coffee beans must be cooled quickly after they reach your desired temperature. A good rule of thumb is to stop the roast a few degrees before your target temperature. With the light shining in the hopper, beans look lighter than they do once removed.

1. Pull out the bean cooler blast gate knob (#1) to open the airway.
2. Turn off the heating elements switch (#2).
3. Turn down the loft if needed (#3).

4. Wearing heat-resistant gloves, lift the hopper and rotate it to the right to empty the beans into the bean cooling tray (#4).

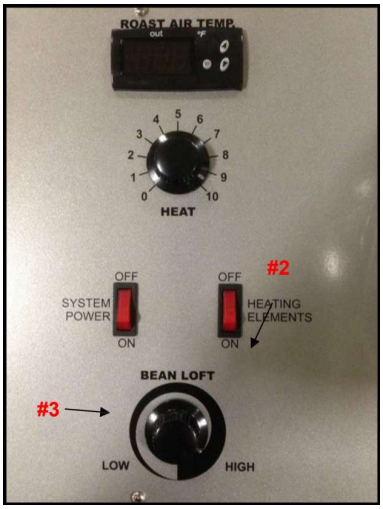

⚠ **CAUTION**	The hopper gets as hot as any pan on your stove. Always wear heat-resistant gloves when handling it — if you touch the hopper with bare skin, you will be burned. Never set a hot hopper down anywhere except its position on the roaster.

With the beans in the cooling tray, stir occasionally with a stainless steel spoon so no hot spots remain in the corners. This is also a good time to check for rocks or foreign objects. Cooling takes about 1 minute for smaller loads and about 2½ minutes for larger loads. When the beans are cool, push the cooling knob back in to close the air tube under the perforated tray. The tray lifts out for easy pouring.

NOTICE	Close the bean cooler blast gate after each cooling cycle. An open blast gate robs suction from the hopper.

SECTION 8

Coffee Bean Education

Proper Storage of Green Coffee Beans

The two most important variables for storing green beans are humidity and temperature. Green beans store well for over two years when kept properly.

Good Practices

- Store beans between 50–85°F. If the temperature is comfortable for you, it's comfortable for your beans.
- If you purchased full bags, keep beans in the jute bag they came in for good breathability.
- Keep beans off the ground — store on a pallet. This promotes air circulation and prevents condensation.
- Keep beans away from pets, sinks, and water sources.
- For smaller quantities, food-grade buckets with gamma-seal lids work well and provide an airtight seal.
- Vacuum-sealed bags are an excellent, though more expensive, option — packed beans require less monitoring because they are not exposed to oxygen or atmospheric moisture.

Things to Avoid

- High humidity
- Significant temperature swings
- Direct sunlight

SECTION 9

Maintenance & Troubleshooting

Your roaster requires periodic maintenance and cleaning. The exact schedule depends on how much coffee you roast. For detailed cleaning procedures, see the Cleaning & Sanitation Guide (Section 3).

Maintenance

Chaff Bags

Every time you roast, inspect the condition of the chaff bag. Suction works best when the bag is less than half full and clean. Empty the bag often; when it becomes covered in chaff dust, replace it with a clean bag. Dirty bags can be washed with mild detergent and air-dried completely before reuse. Vacuum the inside of the chaff collector whenever the bag is removed.

Scan for a video on cleaning chaff bags

⚠ WARNING	**Chaff bags are flammable. A bag that is allowed to fill with chaff dust, or that is not cleaned or replaced often enough, can catch fire — and a clogged bag also restricts airflow, which drives exhaust temperatures up. Inspect the bag every time you roast, empty it before it reaches half full, and replace any bag that stays coated in dust after washing.**

Roast Hopper and Chaff Guard

See Section 3 for the full procedure. Wash the hopper and chaff guard by hand in hot soapy water, and be careful of the probe bracket edges — they can cut you. Do not let water drip into the heat chamber. After cleaning, reset the thermometer probe.

Taking the Hopper Off

Rotate the hopper 90° to the left, lift slightly, and pull it toward you. It is easier if you look behind the hopper to see the key rotate into the removal position.

Bean Cooling Tray

With use — especially with darker roasts — oil builds up inside the cooling tray. Remove the tray and wash with warm soapy water, rinsing and drying well. While it is out, vacuum any beans and dust from the cooling void beneath it and wipe the area with a damp cloth.

Mast Ducting

Inspect the ducting inside the mast regularly and clean it when dirty. You can check it by removing the duct at the upper chaff collector connection, as shown.

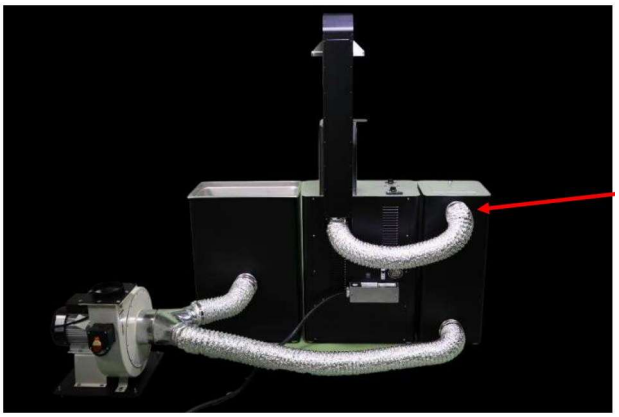

Exhaust Ducting

Run a duct brush through the inside of all exhaust ducting. If you have elbows in the run, you may need to take the line apart to clean it fully. After cleaning, inspect the inside of the blower and brush each fin; once everything is reattached, turning on the blower will clear the remaining debris. How often you clean depends on how many pounds you roast — when the inside of the ducting is coated with dust, it is past time to clean it.

⚠ **WARNING**	**Dirty exhaust systems cause fires. Chaff and oil residue inside the ducting are combustible. Always unplug the exhaust blower before performing any cleaning or maintenance on the exhaust ducting, and clean the run on a regular schedule rather than waiting for visible buildup.**

Duct cleaning tips

Troubleshooting tips

Exterior Surfaces

Wipe the lid with a damp cloth. Never use an overly wet towel — excess liquid could damage electrical components. The body can be washed with a damp cloth or mild detergent. Do not use industrial spray cleaners or degreasers on your roaster.

Troubleshooting Guide

This section provides guidance for roaster owners and qualified repair persons working on the Artisan Xe. All wiring is color-coded and labeled, and videos on replacing most components are on our YouTube channel. When ordering replacement parts, refer to the Part List and include your serial number (on top of the power distribution block on the back of the machine).

⚠ **WARNING**

Always unplug the roaster (or switch off its breaker) and let all components cool before removing any panel or working on internal wiring, switches, contactors, or the heating element. Working on the roaster while it is powered or still hot is a fire and shock hazard. If you are not comfortable performing electrical troubleshooting, contact Coffee Crafters or a licensed electrician.

PROBLEM	CAUSE(S)	SOLUTION
Exhaust blower loses suction	1. The chaff bag is dirty. 2. An obstruction in the vent pipe. 3. The bean cooler blast gate is open. 4. The hood blast gate is open.	1. Replace the dirty chaff bag with a clean one. 2. Check the vent pipe from the blower discharge through the wall fitting. Remove the obstruction or replace damaged duct. 3. Close the bean cooler blast gate while roasting. 4. Close the hood blast gate. *The most common cause is a dirty chaff bag. Bags plug much faster with darker roasts. Clean bags also reduce exhaust temperature.*
Bean loft motor won't start	1. System power switch is off. 2. Faulty system power switch. 3. The SSR-40 motor speed module has failed. 4. Faulty potentiometer. 5. Tripped system power fuse.	1. Ensure the system power switch is on. 2. Check switch voltage in the on position. If no voltage, replace the switch. 3. Check the SSR-40 motor speed module voltage output. If none, replace it. 4. Check the motor speed potentiometer for linear resistance. If ohms do not drop to 0 when turned all the way up, replace it. 5. Check for a tripped system power fuse on the back of the machine. *A tripped fuse indicates a fault. If resetting the fuse does not restore power, call Coffee Crafters.*
Loft motor runs but heat elements won't turn on	1. Heat element switch failed. 2. Faulty connector on the input side of the heat switch. 3. Temperature controller setting. 4. Faulty temperature controller.	1. Replace the heat element switch. 2. Replace the connector and heat switch. 3. The roast air temperature setting must be higher than your desired ending bean temperature. 4. Replace the temperature controller. *With system power on, check voltage at the heat switch output (center terminal). If none, replace the switch.*
Loft motor runs at full speed only	1. The SSR-40 motor speed module has failed. 2. Motor speed control potentiometer has failed.	1. Replace the SSR-40 motor speed module. 2. Replace the motor speed control potentiometer.

PROBLEM	CAUSE(S)	SOLUTION
Both elements running but roasts take too long	1. Ambient air temperature too low. 2. Low line voltage.	1. Roast smaller loads until you find the maximum load that reaches optimum roast air temperature. 2. Have an electrician install a buck-boost transformer. *Roasting below 50°F increases roast times — roast in an enclosed, heated space in cold weather. The roaster does not perform well below 215V under load; have a qualified electrician check your line voltage under load.*

Figures

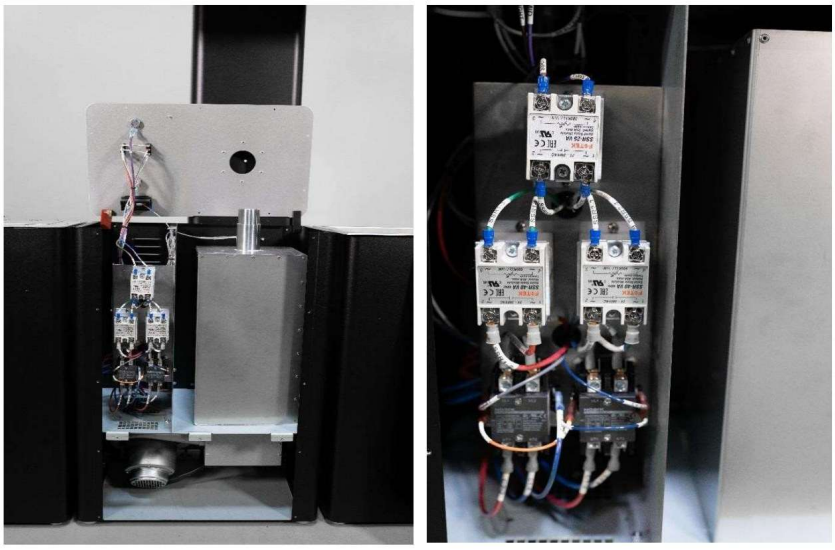

Figure 1.1 — Roaster with the lid up and the front panel removed

Wiring connection of controllers underneath the lid.

Figure 1.2 — Wiring connections of the controls underneath the lid

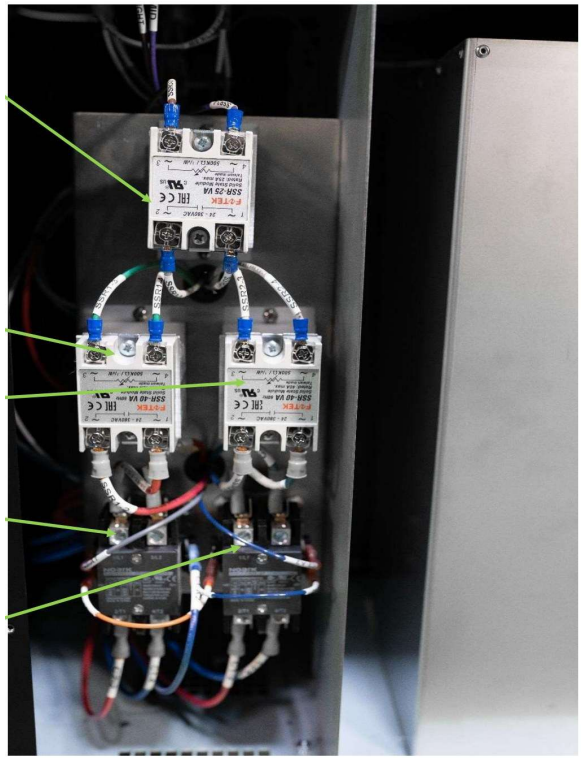

Figure 1.3 — Electrical panel: three SSR-40 modules — motor speed control (top) and heat control (middle), and Contactors 1 and 2 (bottom)

Figure 1.4 — SSR connections. The SSRs are installed with the writing upside down. Potentiometer connections are on the top; power connections are on the bottom.

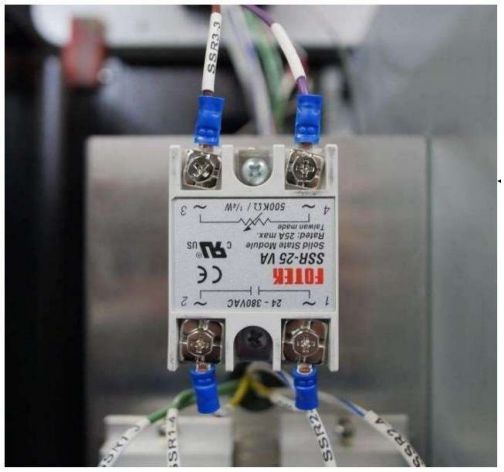

SSR-40 — motor speed control module

SSR-40 — heat control modules

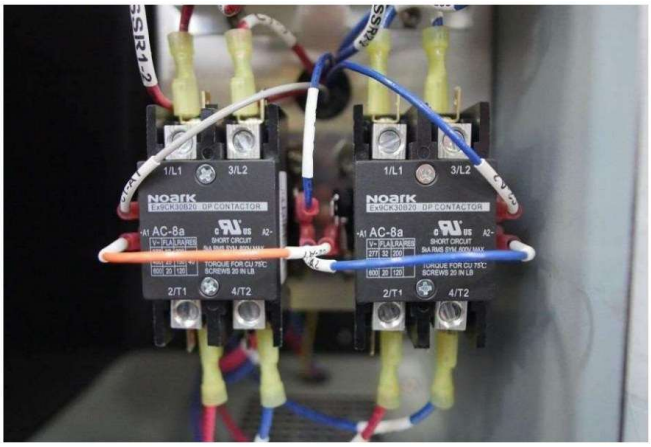

Figure 1.5 — Contactors

Wiring Diagrams

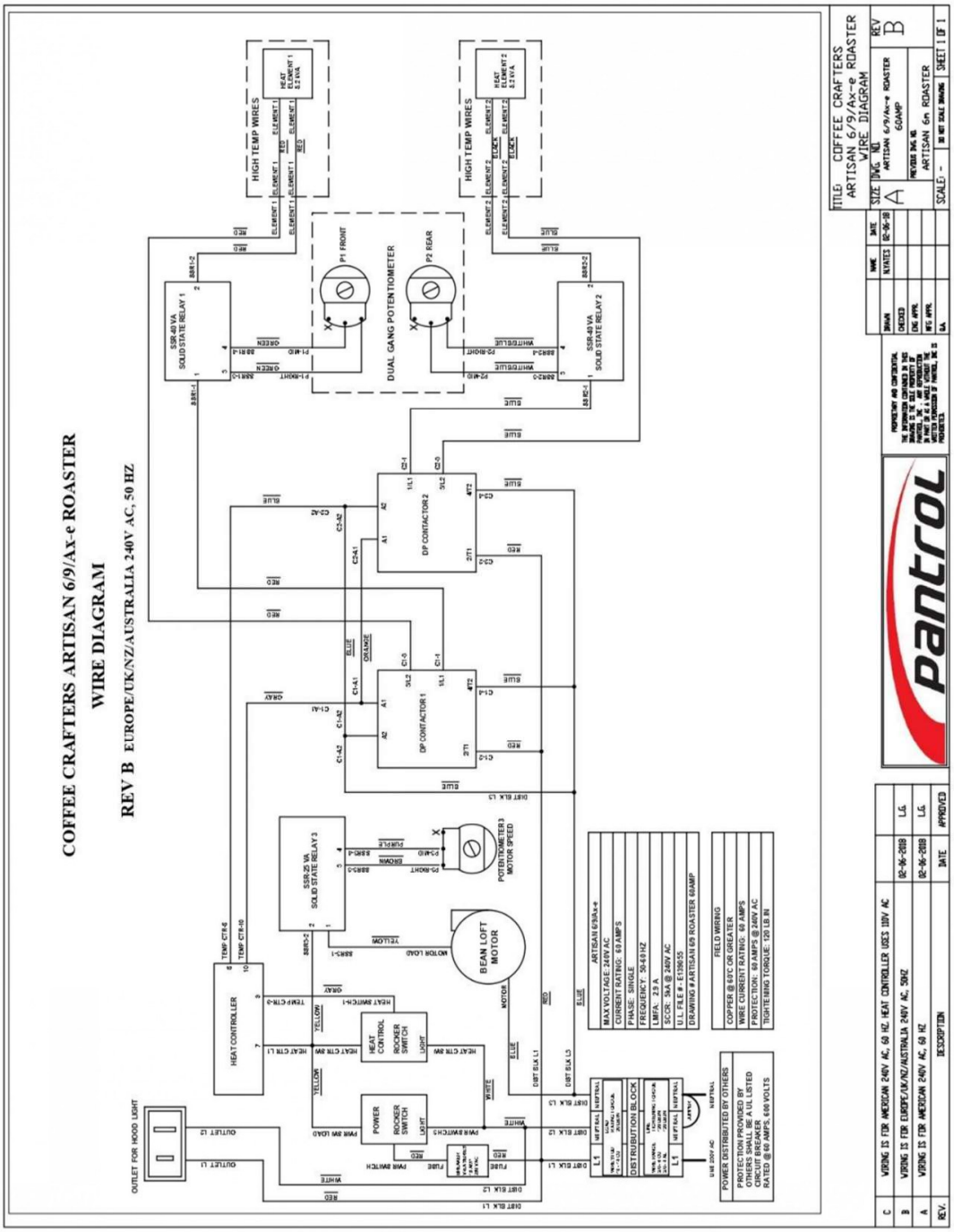

Wiring diagram

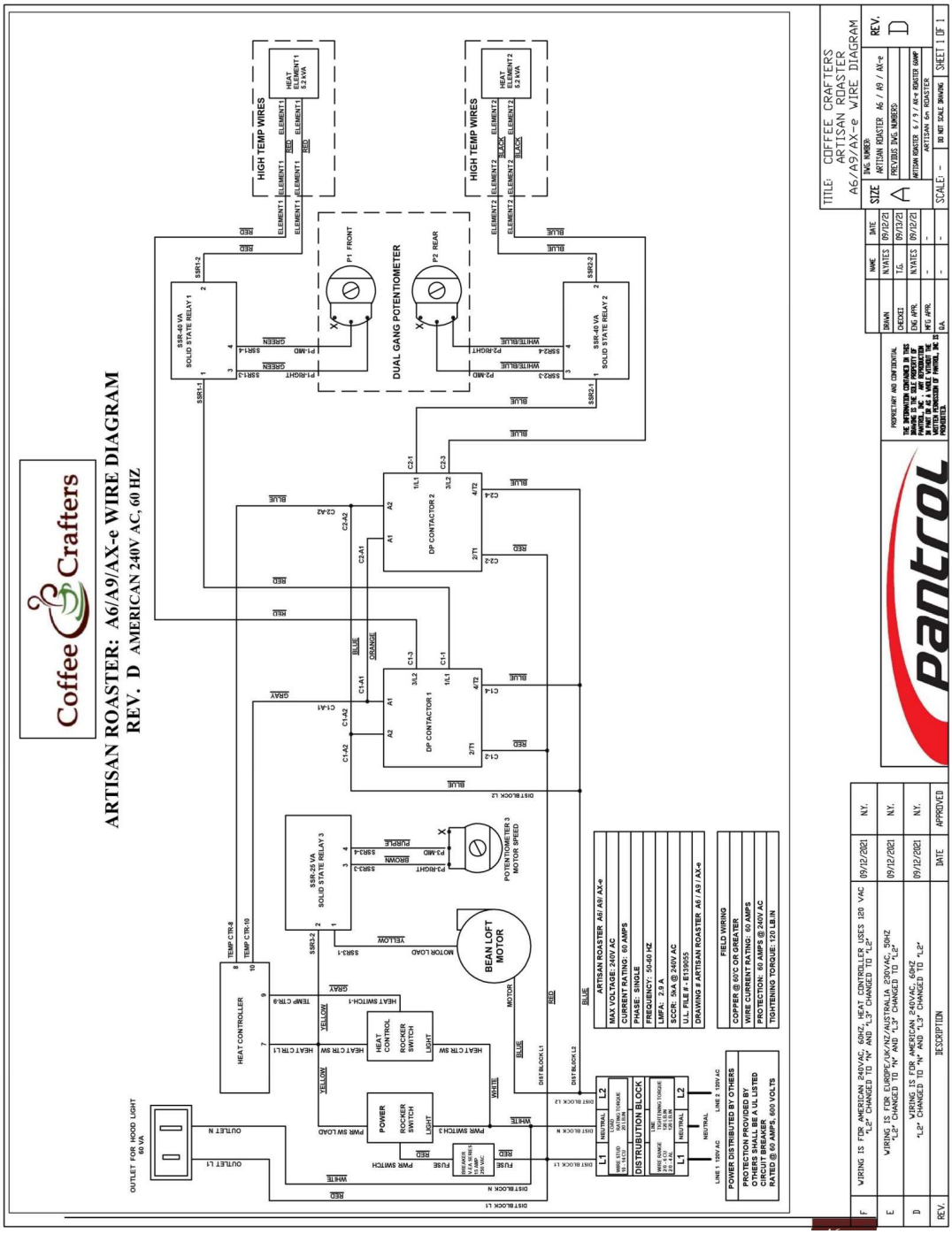

Wiring diagram

Part List

NOTE This list reflects the original Artisan Xe parts list. Because this model is discontinued, some part numbers may have changed or parts may no longer be available. Contact Coffee Crafters with your serial number to confirm availability before ordering.

Part Description	Part Number
Artisan Xe Roaster	A9-PCK-1000-BLK
Roaster Floor	A9-FLR-1000
Roaster Side Panel, Left	A9-RPK-1100
Roaster Side Panel, Right	A9-RKK-1200
Roaster Front Panel	A9-RPK-1300
Roaster Rear Panel	A9-RPK-1400
Roaster Lid	A9-LID-1000
Heat Dam	A9-RHD-1000
Electronic Bracket	A9-REB-1000
Heat Chamber	A9-HCA-1000
Heat Shroud Assembly	A9-HAS-1000
Heat Element Mount Plate	A9-EMP-1000
Air Box	A9-AIR-1000
Blower Mount Bracket	A9-BMB-1000
Chimney	A9-RCW-1000
Distribution Block	A9-RDB-1000
Distribution Block Cover	A9-DBC-1000
Bottom Panel	A9-RBP-1000
Foot Bracket	A9-FB-1000
Bean Loft Blower	CC-2165-00 BLB
Thermocouple Wire Chimney	CC-TWTK 1/4x20
Bean Cooler Assembly	A9-BCB-1000-BLK
Bean Cooler Subfloor	A9-BCB-1100
Cooling Tray Assembly	A9-BCT-1000
Chaff Collector Assembly with Lid	A9-CCA-1000-BLK
Hood Assembly	A9-HD3-1000
Light Kit	CC-LIGHT KIT

Part Description	Part Number
Bean Loader	A9-CHT-1000
Mast Assembly	A9-BMM-1000
Hopper Support	A9-RHS-1000
Hopper Mount Kit	A9-HMK-1000
Hopper	A9-RHA-1100
Handle Mount	A9-RHA-1160
Handle (Delrin)	A6M-6006
Temperature Probe Bracket	A9-TPB-1000
Thermometer Bracket	A9-HTM-1000
Chaff Guard Kit	A9-BCG-1000
Shop Fox Euro Blower Assembly	A9-BLW-1000-EURO
Blower Base	A9-BLW-1100
Transition Manifold	A9-BLW-1200
200 Micron Chaff Bag	CCM-size 1-7x16 200
400 Micron Chaff Bag	CC-#1-7x16 400
3″ Hose Clamp	CC-3-HC
4″ Hose Clamp	CC-4-HC
6″ Hose Clamp	CC-6-HC
Electrical Assembly	CC-UL-Ele-Asm
Breaker	CC-1D15UM
Digi Thermometer Complete	CC--MS6501
Thermometer Probe	CC-A9-TCP-1000
Fotek SSR25-VA ¼ watt	CC-Fotek SSR 25-VA 1/4 watt
Fotek SSR40-VA ¼ watt	CC-Fotek SSR 40-VA 1/4 watt
Potentiometer 500k Double	CC-R-VA2X500KL
Potentiometer 500k Single	CCE-alfa500k
Noark Contactor 40-amp 240V	CC-Ex9CK30B20
Power Distribution Block	CCE-63133
Single Red Switch (Cherry)	CC-TRG22F2BBRLN
Speed Control Knob	CC-SPKnob
Temperature Controller (°F)	CCE-4020

Part Description	Part Number
Temperature Controller (°C)	CCE-4021
Heat Element Cartridge (240V)	21-21852-00
Heat Element Cartridge (220V Euro)	21-21852-03