COFFEE CRAFTERS LLC · POST FALLS, IDAHO

# VALENTA 3

by Coffee Crafters

**3-lb Commercial Fluid Bed Electric Coffee Roaster · Owner's Manual**

708 S Clearwater Loop, Suite 105 · Post Falls, ID 83854
www.coffeecrafters.com · (509) 228-6916 · info@coffeecrafters.com
Copyright © 2026 Coffee Crafters LLC · All Rights Reserved · Rev 4

# CONTENTS

**1 Introduction** ..... **3**
About Coffee Crafters ..... 3
Our Team ..... 3
A Letter from the President ..... 4
Important Safety Information ..... 5
**2 Warranty & Guarantee** ..... **7**
Valenta 3 Warranty ..... 7
What Is Not Covered ..... 7
If You Need Service ..... 8
30-Day Money-Back Guarantee ..... 8
Return Instructions ..... 8
Damaged or Defective Items ..... 9
**3 Cleaning & Sanitation Guide** ..... **10**
Food Equipment Sanitation & Your Health Department ..... 10
General Safety Precautions ..... 10
Roasting Chamber ..... 11
Bean Cooling Tray ..... 12
Chaff Collector, Cyclone & Exhaust Ductwork ..... 12
Green Bean Hopper & Loading Chute ..... 13
Cleaning Log ..... 14
**4 What to Do If You Have a Fire** ..... **15**
Emergency Procedure ..... 15
After a Fire ..... 15
**5 Specifications** ..... **16**
**6 Assembly & Installation** ..... **18**
Hardware Packages ..... 18
Removing the Roaster from the Pallet ..... 19
Hood Installation ..... 19
Thermometer ..... 21
Power Cord Installation ..... 23
Installing the Chaff Cyclone ..... 24
Ducting from the Roaster/Bean Cooler to the Blower ..... 25
Exhaust Ducting to the Outside ..... 26
Valenta 3 Deluxe Dimensions ..... 27
Ventilation Installation ..... 27
Exhaust & Ventilation Codes ..... 28
Light Installation ..... 29
Temperature Switch ..... 31
**7 Roasting** ..... **32**
Roast Coffee in 6 Easy Steps ..... 32
Roasting Recommendations ..... 34
Cooling the Beans ..... 35
**8 Coffee Bean Education** ..... **36**
Proper Storage of Green Beans ..... 36
**9 Maintenance & Troubleshooting** ..... **37**
Maintenance ..... 37
Troubleshooting Guide ..... 39
Figures ..... 41
Wiring Diagrams ..... 45
Part List ..... 47

SECTION 1

# Introduction

## About Coffee Crafters

Coffee Crafters manufactures all-electric fluid bed coffee roasters in Post Falls, Idaho. Since 2012, we have helped new and growing roasters get into the business with equipment that is affordable, easy to operate, and easy to maintain — built 100% in the USA.

### Our Team

Jason Scott — Owner and President. Jason is the founder of Hermetheus Coffee, a roastery in the Kansas City area that he built on a Coffee Crafters Artisan 6. He began working with the Coffee Crafters team in 2022 on the Hermetheus Co-Pilot automation system and purchased Coffee Crafters from Ken Lathrop in 2025.

Chris Hammock — Chief Engineer and co-owner. Chris designed every roaster in the current Coffee Crafters lineup, including the Valenta series. He has led all engineering and product development since 2021.

Bryce Bull — Vice President in charge of Sales, Marketing, and Customer Service. Bryce is the longest-tenured member of the team and serves as the primary voice for customers. If you call or email Coffee Crafters, Bryce is most likely who you will hear from first.

Angela — Shipping, Logistics, and Purchasing. Angela coordinates all outbound shipments and handles logistics for new roaster orders as well as coordinating the acquisition of materials for manufacturing our roasters.

## A Letter from the President of Coffee Crafters

Your new Valenta 3 Roaster is one in a line of roasters we manufacture to be made right here in our warehouse in Post Falls, Idaho, USA. The enclosed roast chamber is the product of tireless testing and learning over the many years we have been building roasters.

Like every roaster we make, the Valenta 3 is easy to install, easy to operate, easy to maintain, and affordable.

I was a Coffee Crafters customer long before I took the reins here. I built Hermetheus Coffee, a roastery in the Kansas City area, on a trusty Artisan 6. In 2022, I started working with the Coffee Crafters team on the Co-Pilot automation, and when Ken decided to retire, he asked me to carry the company forward.

Chris Hammock, who designed every roaster in our current lineup, is still here as my partner and leads engineering. Bryce Bull, our vice president, is the voice most of our long-time customers already know and is still the person you will likely speak with when you call. In fact, aside from Ken's retirement, every person who was here before the transition is still here today.

That matters, because at Coffee Crafters, support is not an afterthought. Over a decade in, we are still the shop where you can reach the engineer or the owner any day of the week. Check out our YouTube channel for roasting and marketing guidance, reach out any time, and know that we are invested in your success.

Welcome aboard. Roasting made easy starts now.

**Jason Scott**
President, Coffee Crafters

## Important Safety Information

Read this entire manual before installing or using your Valenta 3 Deluxe, and keep it near the roaster for anyone who operates it. Coffee roasting uses high heat and produces chaff, smoke, and oils that can catch fire. Following these instructions keeps you, your space, and your roaster safe.

### Safety Messages in This Manual

Safety messages in this manual follow the ANSI Z535 format. The ⚠ safety alert symbol means a personal injury hazard. Obey every safety message that follows this symbol.

| | |
|---|---|
| ⚠ DANGER | Indicates a hazardous situation that will result in death or serious injury if not avoided. |
| ⚠ WARNING | Indicates a hazardous situation that could result in death or serious injury if not avoided. |
| ⚠ CAUTION | Indicates a hazardous situation that could result in minor or moderate injury if not avoided. |
| *NOTICE* | Indicates information about preventing damage to the roaster or your property. No personal injury hazard. |
| SAFETY INSTRUCTIONS | Indicates steps or procedures for safe operation. |

### Key Hazards

| | |
|---|---|
| ⚠ WARNING | **Fire hazard.** Beans, chaff, and roasting oils can ignite. A fire can spread into the exhaust ducting and the building.<br>• Never leave the roaster unattended while it is on.<br>• Always run the exhaust blower whenever the roaster is on. Never roast with the blower off.<br>• Empty the chaff collector before it is 50% full.<br>• Clean the exhaust ducting at least once a year, and more often with heavy use.<br>• Keep a fire extinguisher rated for the space within reach whenever the roaster is running.<br>• Know the fire procedure in Section 4 before your first roast. |

| | |
|---|---|
| ⚠ WARNING | **Electric shock hazard.** This roaster runs on high-voltage power. Contact with live parts can kill.<br>• Have a licensed electrician install the circuit, receptacle, or hardwired connection to local electrical code.<br>• Use only a properly grounded supply that matches the Specifications in this manual.<br>• Turn off and unplug the roaster, or switch off its breaker, before cleaning, servicing, or opening any panel. |

| | |
|---|---|
| ⚠ **WARNING** | **Exhaust hazard.** Roasting smoke contains carbon monoxide and other combustion byproducts.<br>• Vent the exhaust outdoors through metal ducting as described in Assembly & Installation.<br>• Never vent into a room, attic, crawl space, or another building exhaust system.<br>• Follow your local mechanical and fire codes (see Exhaust & Ventilation Codes in Section 6). |

| | |
|---|---|
| ⚠ **CAUTION** | **Burn hazard.** The roast chamber, hood, glass, exhaust parts, and freshly roasted beans get hot enough to burn skin.<br>• Do not touch hot surfaces during or right after roasting.<br>• Let the roaster cool before cleaning.<br>• Keep children and pets away from the roaster while it is in use or cooling. |

| | |
|---|---|
| ***NOTICE*** | Use the roaster only for roasting coffee beans. Do not modify the roaster or bypass its safety interlocks. Using parts other than Coffee Crafters replacement parts can damage the roaster and void the warranty. |

SECTION 2

# Warranty & Guarantee

## Valenta 3 Warranty

Your Valenta 3 Roaster has been manufactured and tested to the highest quality standards by Coffee Crafters. This Limited Warranty covers defects in material or workmanship on new Valenta roasters. The warranty extends to the original purchaser only and is non-transferable. Only customers purchasing roasters directly from Coffee Crafters may obtain coverage under this limited warranty.

Under normal installation per Coffee Crafters instructions, use, service, and maintenance, for a period of one year from the original purchase date, Coffee Crafters will replace, at no charge, any product or part of the product that proves defective due to improper workmanship or material.

The warranties expressed above are the ONLY warranties provided by the manufacturer. These warranties give you specific legal rights, and you may also have other rights which vary from state to state.

## What Is Not Covered

Conditions and damages resulting from any of the following:

- Improper installation, delivery, or maintenance
- Any repair, modification, alteration, or adjustment not authorized by the manufacturer
- Misuse, abuse, accidents, unreasonable use, or acts of God
- Incorrect electric current or voltage
- Improper setting of any control
- Use of risers or pedestals not authorized by the manufacturer
- Products returned with removed, damaged, or tampered labels, equipment, or alterations
- Products where original serial numbers have been removed, altered, or cannot be readily determined
- Chaff filters (consumable items)
- Products purchased for use other than roasting coffee
- Any food loss due to product failures
- Travel and transportation expenses for product service
- Consequential or incidental damages. Some states do not allow the exclusion or limitation of consequential or incidental damages, so the above exclusion may not apply.

## If You Need Service

- See the Maintenance & Troubleshooting section of this manual
- Visit our YouTube channel for maintenance and troubleshooting videos on fixing and replacing roaster parts
- If you are still having issues, give us a call or send us an email so we can work through it with you.

**CONTACT** Phone: (509) 228-6916 · Email: info@coffeecrafters.com

## 30-Day Money-Back Guarantee

We want you to be fully satisfied with every item you purchase from Coffee Crafters. If you are not satisfied with an item, you may return it within 30 days of delivery for a full refund of the purchase price, minus shipping, handling, or other additional charges. The item must be returned in like-new condition, in its original boxes, and with all paperwork, parts, and accessories to ensure full credit.

## Return Instructions

For tracking and insurance purposes, all returns must be shipped to Coffee Crafters.

- Contact Coffee Crafters Customer Service at (509) 228-6916 to begin the return process
- Pack the item securely in the original package if possible. Enclose the return portion of the original packing slip
- All products must be returned in excellent condition, in original boxes, and with all paperwork, parts, and accessories
- All return shipping charges must be prepaid. We cannot accept C.O.D.
- Keep the return tracking number from your package to confirm it arrives at the warehouse
- Expect a refund in the original form of payment within 10–15 business days of our receiving your return. Shipping costs are not refundable

## Damaged or Defective Items

If your roaster arrives and the outer packaging shows visible damage — crushed corners, punctures, or significant deformation — do not sign for the delivery. Refuse the shipment and contact Coffee Crafters immediately at (509) 228-6916. Signing for a visibly damaged shipment may affect your ability to file a claim.

If damage is discovered after delivery, contact Coffee Crafters Customer Service at (509) 228-6916 as soon as possible. Please have your order number, item number, and tracking number from your original confirmation email ready. We will also need your email address and phone number.

We will make every reasonable effort to assist you with your return. If you do not contact Customer Service first, you are responsible for all return shipping charges. A defective item may be repaired or replaced if reported within 90 days of purchase under the Coffee Crafters Warranty.

Section 3

# Cleaning & Sanitation Guide

**Cleaning Introduction:**

This document provides manufacturer-recommended cleaning and sanitation procedures for Coffee Crafters fluid bed air roasting systems. It covers the roasting chamber, bean cooling tray, chaff handling components, and associated bean-handling surfaces. It is intended to support a customer's written sanitation program and to respond to a local health department's request for equipment-specific cleaning guidance.

These procedures apply to all Coffee Crafters roasters.

**Food Equipment Sanitation & Your Health Department:**

If you roast for a coffee shop, café, or other licensed food business, your local health department may review your roaster before you open or during an inspection. Here is what they usually ask for.

**NSF certification.** Coffee Crafters roasters are **not** certified to NSF/ANSI 4 or any other NSF food-equipment standard. Many health departments follow the FDA Food Code, which treats equipment certified by an ANSI-accredited program as automatically acceptable. Equipment without that certification can still be approved, but the inspector may review how it is built and cleaned. Ask your health department early, before you finalize your plan review.

**What to give your inspector:**

- **This manual,** especially this Cleaning & Sanitation Guide and its Cleaning Log.
- **Food-contact materials:** roast chamber — 304 stainless steel, 12 and 16 gauge; viewing glass — borosilicate glass; bean cooling tray — 304 stainless steel, 18 gauge; green bean hopper and loading chute — 304 stainless steel, 20 gauge.
- **Electrical safety listing:** UL listed, UL File No. 139055, as shown on the roaster’s data plate.
- **Your cleaning schedule:** how often you clean depends on how much and how often you roast. Use the frequency listed for each component in this guide and adjust it to your roasting volume.

**Good practice for a food business:**

- Keep green coffee storage, roasting, and packaging areas clean and separate from chemicals.
- Use only food-safe cleaners on food-contact surfaces, and rinse as directed.
- Keep the Cleaning Log current. It is the easiest way to show an inspector your routine.

**General Safety Precautions:**

- Always power down, lock out, and allow the unit to cool to a safe handling temperature before opening any panel, tray, or collector.
- Never spray water or use wet cleaning methods on the control panel, motor housing, heating elements, or other electrical components.
- Use a HEPA-filtered vacuum or dry brushing for chaff and dust removal — avoid compressed air, which aerosolizes fine combustible dust.
- Do not use chlorinated cleaners, steel wool, or abrasive pads on the roast chamber interior or cooling tray screen; these can damage surfaces and leave residue that affects roast flavor.
- Wear appropriate PPE (gloves, eye protection, and a dust mask/respirator when cleaning chaff collection areas) per your facility's safety program.

**Procedures by Component**

## Roasting Chamber

### Why it matters

The Valenta's fluid-bed design suspends beans in a high-velocity heated air stream rather than tumbling them against a drum wall, and that same air stream carries most chaff onward to the cyclone during the roast itself — so the roast chamber doesn't accumulate chaff the way a drum does. What it does accumulate over time is a film of roasted-bean oil and fines on the chamber walls, perforated screen, and air distribution plate. That buildup gradually changes airflow and heat transfer, which shows up first as roast-to-roast drift (batch times or profiles no longer matching) before it becomes a housekeeping problem.

### Frequency

Full roast chamber teardown and interior cleaning approximately every 5,000 lbs of coffee roasted (or sooner if you notice airflow/roast-time drift, which is usually the earliest sign buildup has reached the distribution plate). Between teardowns: a quick visual/airflow check at your normal service interval, and exterior/access-point wipe-down as needed — no interim disassembly required.

This is a labor-intensive process and you should plan for extended cleaning time.

### Procedure

- Power down, lock out, and allow the full system to cool to a safe handling temperature before beginning teardown.
- Once cool, remove the probe and set aside.
- Take the top and right/front panel (the one that has the viewing portal) off the roaster
- Once the panels are off, you can detach the roast chamber from the roaster.
- Dry-brush loose chaff and fines from all interior surfaces, then wipe down oil film with a lightly dampened food-safe cloth; use a food-equipment-safe degreaser per the product label on heavier buildup, then wipe dry.
    - For a deeper cleaning, soak the roast chamber in hot water and dish soap or Cafiza (a food-grade espresso machine cleaner) then scrub with a plastic dish brush.
- Inspect the perforated basket/screen and distribution plate for blocked holes and clear them — partial blockage is what drives most of the airflow drift between cleanings.
- Reinstall the roast chamber, refit the panels, and reattach the probe.

### Tools & materials

Dry brush, lint-free cloths, food-equipment-safe degreaser (non-chlorinated), service manual for your specific model.

### Cautions

- This is a scheduled-downtime job, not something to start mid-shift — budget the time the teardown actually takes on your model.
- Track roast count or throughput (e.g., a running lb total since last teardown) so the ~5,000 lb interval doesn't rely on memory alone — the cleaning log at the end of this section works well for this.

## Bean Cooling Tray

### Why it matters

This is the highest-priority food-contact surface in the system: beans land here immediately after roasting with no further heat treatment, and the screen accumulates chaff dust, bean fragments, and potential insect activity.

### Frequency

Brush/vacuum chaff after every batch or at end of shift, whichever is more frequent. Full wash-down of the tray and screen daily during operation.

### Procedure

- Power down and allow the tray to cool.
- Remove loose chaff and fines with a HEPA-filtered vacuum or brush.
- Detach the tray and wash with warm water and a food-safe detergent; rinse and air-dry completely before reinstalling.
- Wipe the tray surface with a food-safe sanitizing solution; allow to air-dry.
- Check underneath the tray and around the cooling fan intake for accumulated chaff and clear it.

### Tools & materials

HEPA vacuum, food-safe detergent, food-contact-surface sanitizer, lint-free cloths.

## Chaff Collector, Cyclone & Exhaust Ductwork

### Why it matters

In a fluid-bed roaster, this is where most chaff actually ends up — the air stream carries it out of the roasting chamber continuously during the roast rather than leaving it to sit in a drum. That makes this the primary chaff pathway to keep clear. It's not a food-contact surface, but chaff and fine dust here are a combustion hazard and a pest attractant, and a partially blocked cyclone or duct can itself become the airflow problem that shows up as chamber drift.

### Frequency

Empty the chaff collection bin daily (or more often at high volume). Inspect and clean cyclone interior and duct joints weekly.

### Procedure

- Confirm the system is powered down and cool before opening the drawer.
- Empty the chaff drawer into a covered, non-combustible container; dispose of per local fire code.
- Vacuum or brush accumulated chaff from the cyclone body and accessible duct sections.
- Inspect duct joints/seals for chaff accumulation and leaks; clean and reseal as needed.
- Replace or clean filters as needed.

### Tools & materials

HEPA vacuum, brush, covered non-combustible waste container.

### Cautions

- Chaff is combustible — never use compressed air and keep collected chaff away from ignition sources.
- Follow your local fire marshal's requirements for chaff/dust disposal frequency if applicable.

## Green Bean Hopper & Loading Chute

### Why it matters

Holds raw (unroasted) green beans, which carry field/warehouse dust and occasional foreign material. Not heat-treated at this stage, so good housekeeping here prevents contamination carrying into the roast.

### Frequency

Visual inspection before each load; full wipe-down and debris removal weekly.

### Procedure

- Empty the hopper and remove any dust, chaff, or foreign material (stones, twigs) from the bottom and walls.
- Wipe interior surfaces with a dry cloth; use a lightly dampened food-safe cloth for dust film, then dry completely before reloading beans.
- Check the loading chute and any gates or valves for residue buildup and clear as needed.

## Cleaning Log

| Date | Component | Performed by | Observations / corrective action |
|---|---|---|---|
| | | | |
| | | | |
| | | | |
| | | | |
| | | | |
| | | | |
| | | | |
| | | | |

## Notes

- This document is manufacturer guidance and a starting point — the operator's food safety/sanitation program should ultimately be reviewed and finalized with their local health authority.
- Adjust frequencies upward for high-volume operations or when roasting particularly oily/dark profiles, which accelerate residue buildup.

Section 4

# What to Do If You Have a Fire

Fires in a coffee roaster are rare, but they can happen, especially if chaff is allowed to build up in the chaff cyclone, the ducting, or around the roaster. Read this page before your first roast so you already know the order of these steps. In an emergency you will not have time to look them up.

| ⚠ WARNING | **Follow these steps in order. Turning the exhaust blower off FIRST is what stops the fire from spreading — every other step depends on it.** |
|---|---|

## Emergency Procedure

1. **Turn off the exhaust blower first.**
   The blower pulls air through the roaster and the ductwork. Leaving it running feeds the fire with oxygen and pushes flames and embers down the exhaust run. Shut it off before you do anything else.
2. **Dump the beans into the bean cooler and shut down the roaster.**
   Getting the burning beans out of the roast chamber removes the fuel. Then turn off the heating element and the system power switch.
3. **Turn off the breaker.**
   Cut power to the roaster at the breaker panel. This removes the ignition source and makes the machine safe to approach.
4. **Use a fire extinguisher if necessary.**
   If the fire has not gone out on its own once the airflow, fuel, and power are removed, use a fire extinguisher rated for the space. Keep one within reach of the roaster at all times.
5. **Call the fire department if needed.**
   If the fire is spreading, has moved into the ductwork or the building structure, or you cannot put it out quickly, get clear and call the fire department. Do not stay to fight a fire you are not able to control.

## After a Fire

Do not roast again until the roaster and the entire exhaust run have been inspected. Fire commonly travels into the ducting, and damage there is not always visible from the roasting area. Contact Coffee Crafters before returning the machine to service so we can help you check it over.

SECTION 5

# Specifications

| MAX BATCH | ROAST TIME | ROASTER HEAT |
|---|---|---|
| 3 lbs | 8–14 min | 5,200 W |

The Valenta 3 is a complete roasting and bean-cooling system. Minimum floor space for the full system is approximately 45″ × 34″.

| PERFORMANCE | |
|---|---|
| **Batch Size** | 200 g to 3 lbs |
| **Roaster Production** | Varies based on batch size and roast time |
| **Roast Time** | 8–14 minutes (manually adjustable) |
| **Roast Air Temperature** | Variable manual control (Fahrenheit or Celsius) |
| **Bean Temperature** | Digital thermometer included |
| **Bean Cooling** | External tray, 3 lbs capacity |
| **Chaff Collection** | Included chaff cyclone |

| POWER & VENTING | |
|---|---|
| **Roaster Power (US)** | 40-amp, 240V single phase (includes blower) |
| **Roaster Power (International)** | 40-amp, 220V single phase |
| **Exhaust System Power** | Exhaust Blower included, plugs into back of roaster |
| **Roaster Heat** | 5,200 watts |
| **Electricity Usage** | 0.3 kWh per pound (full 3 lb load)<br>0.6 kWh per pound (1 lb load) |
| **Venting** | Intake: 4″ rigid ducting<br>Discharge: 4-5″ rigid ducting |

| DIMENSIONS & WEIGHT | |
|---|---|
| **Roaster** | 38″ tall × 44.5″ wide × 32.8″ deep |
| **Shipping Weight** | 173 lbs |
| **Shipping Dimensions** | 1 pallet (36 × 36 × 36 inches) |
| **Minimum Floor Space** | 45.1″ × 33.8″ |

| CERTIFICATION | |
|---|---|
| **Listings** | UL · cUL |

SECTION 6

# Assembly & Installation

## Assembly Introduction

Your Valenta 3 roaster comes mostly assembled. The following instructions will walk you through completing the assembly correctly.

Before you begin, select a suitable location for the roaster and blower system. The blower can be installed anywhere within 10 feet of the roaster — including on the other side of a wall, which some operators prefer if noise is a concern. The customer must supply 4- or 5-inch rigid ducting for outside venting. If you place the blower in a different location, additional vent pipe and fittings will be required. Check your local codes for venting requirements. The blower works best with this roaster sitting either directly behind or underneath the roaster, which should be on a workbench or table.

| | |
|---|---|
| **NOTE** | When correctly installed, the exhaust gas temperature will not exceed 170°F. |
| ⚠ **CAUTION** | The roaster must be positioned on a flat, smooth surface — do not install on carpet. Leave at least a 6-inch gap between the back vent pipes and the wall. |

## Hardware Packages

Your Valenta 3 Deluxe comes with all the fittings and hardware needed to install the chaff collector, roaster, bean cooler, and exhaust blower. Not included: the electrical cord and the ducting to vent the roaster. We recommend using only RIGID ducting.

| | |
|---|---|
| **NOTE** | All hardware is labeled by part and located in the bean cooler tray in bags. |

**Included Hardware:**

- Valenta 3 Hood — (4) 8/32 stainless screws
- Thermometer Bracket — (2) 8/32 black screws and (1) 8/32 stainless screw
- Bean Cooler Bracket — (3) 8/32 by ½'' screws
- Ducting Kit for run from Roaster to the Blower—
  - 1 – 4x4x4 Wye Duct
  - 6 – 4'' 90-degree rigid ducts
  - 1 – 4x4'' Rigid Duct
  - 1 – 4x14'' Rigid Duct

**Additional Items:**

- 3D printed control panel holder for maintenance
- Replacement roast chamber mount gaskets x2
- Multimeter for voltage testing

**ALL PARTS AND ACCESSORIES FOR ASSEMBLING THE ROASTER CAN BE FOUND INSIDE THE ACCESSORY BOX.**

## Removing the Roaster from the Pallet

**Step 1:** Cut off the straps holding the boxes to the pallet. Scissors or a box cutter work well. BE CAREFUL not to cut yourself and use gloves if needed.

**Step 2:** Open the roaster box and remove the roaster. Set on the workbench or table that will be used for the final setup.

| | |
|---|---|
| **NOTE** | It is a good idea to remove all roaster components from all of the boxes and check to ensure it is in good condition. |

## Hood Installation

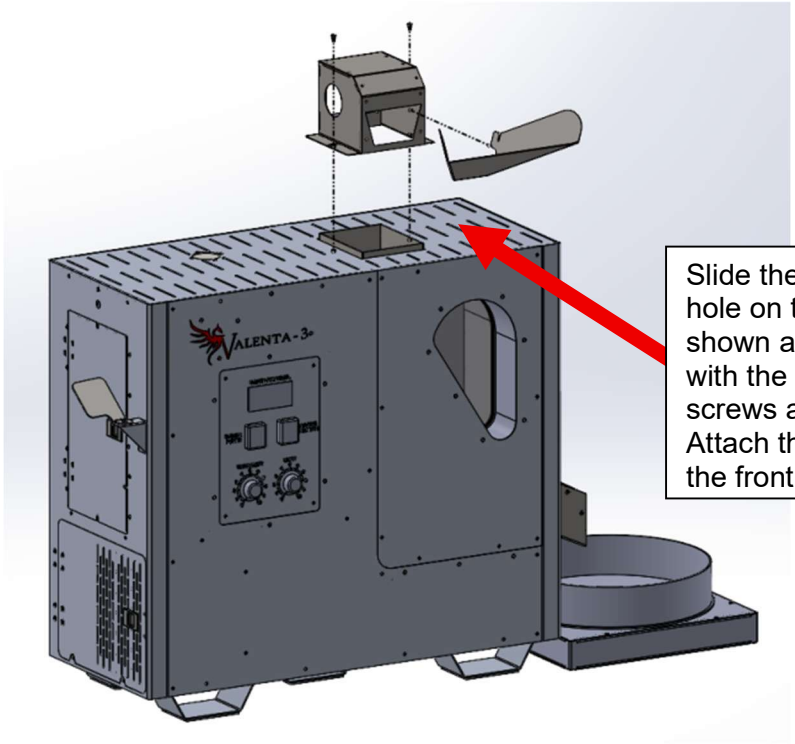


Slide the hood over the square hole on the top of the roaster as shown above. Secure the hood with the provided 2 – 8/32 screws and tighten down. Attach the bean loading chute to the front of the hood.

## Mounting the Thermometer Bracket

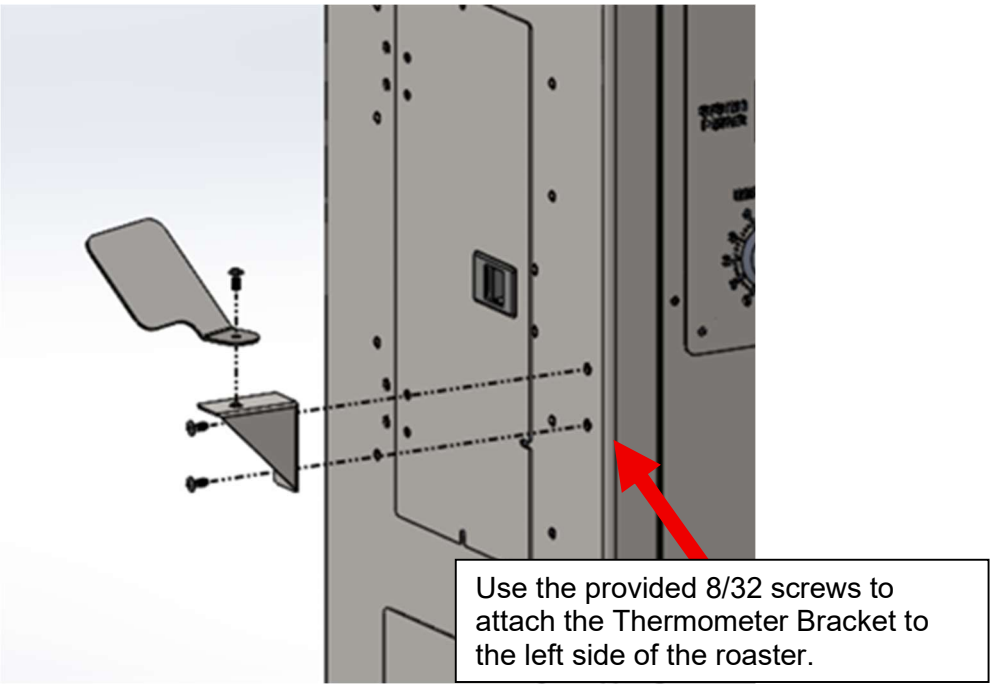

## Thermometer

Your thermometer is located in a blue case inside the bean cooler and mounts on the thermometer bracket located on the left side of the roaster. The Digi-Sense thermometer is easy to operate, with a large, easy-to-read display and only a few basic functions.

**Bean Temp. Calibration:** Use the provided “key-chain” screw to change the setting of the bean temperature reading by inserting it into the H hole and turning the screw left or right (up or down).

For example: First crack should happen around 400 degrees F. If you hear first crack and the temperature reading is 380 degrees, then turn the reading up to 400 degrees and you’ll be back on track.

**Low battery:** When the battery is low, the low-battery symbol appears on the LCD and the battery should be replaced.

The thermometer arrives with the battery installed. Velcro is applied to the back. Remove the plastic backing and mount it on the bracket so the bottom of the thermometer is even with the bottom of the bracket.

## Attaching the Thermocouple Probe

The probe is tucked away inside the compartment next to the Thermometer. This is also where the Hermetheus Co-Pilot is installed if you added this device to your roaster order.

If you are roasting on MANUAL, plug the probe into the Thermometer as shown below.

If you are roasting on AUTO, the probe will be installed on the Hermetheus Co-Pilot. Please refer to the separate instructions for operating/installing the Co-Pilot.

## Power Cord Installation

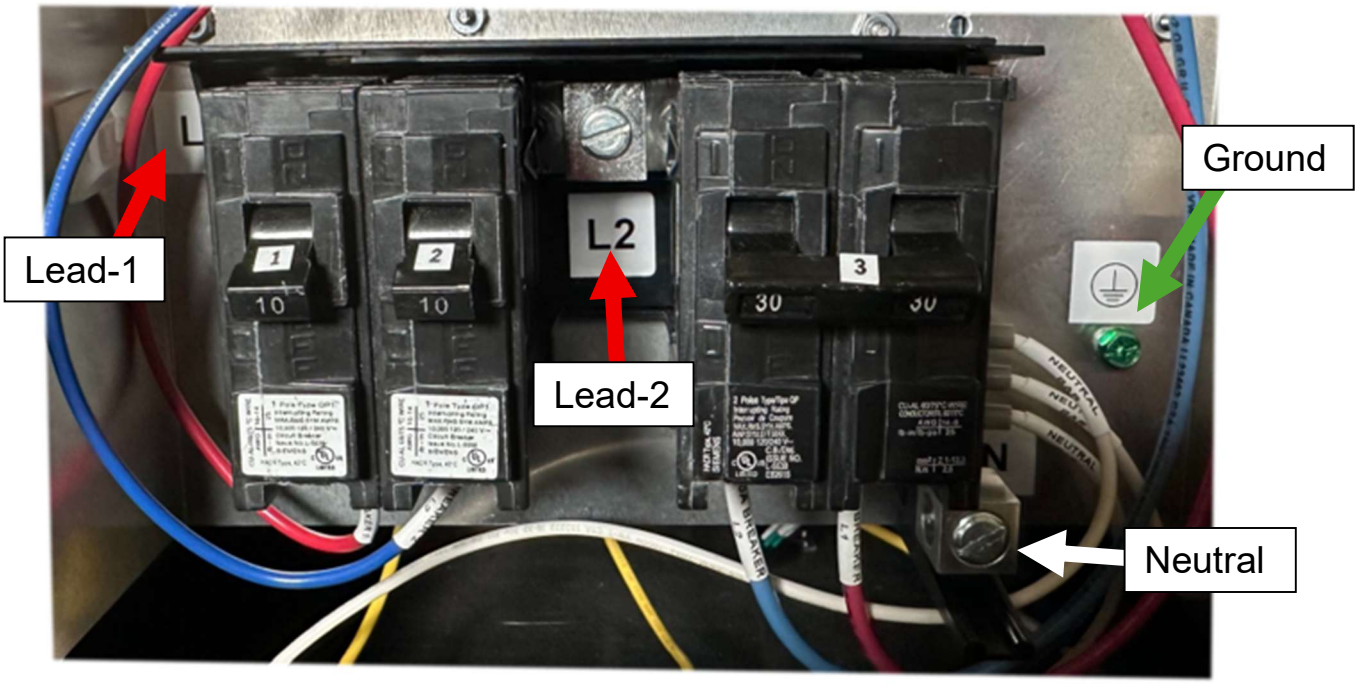


You will need to provide your own power cord for the roaster. We recommend a 40-amp range cord with a pigtail which you can wire into the power distribution block as shown above.

The exhaust blower has a power cord and plug already installed on it. This plug will go into the receptacle on the back of the roaster so the entire system can run on one power source.

PLEASE NOTE: If 40-amp is unavailable, you can install the roaster using a 30-amp cord/outlet. However, you will need to power the blower separately and it cannot be plugged into the back of the roaster.

| | |
|---|---|
| ⚠ **WARNING** | **Improper electrical installation is a fire and shock hazard. This connection must be made by a licensed electrician on a correctly sized dedicated circuit. Loose or undersized wiring at the power distribution block can overheat and start a fire — do not operate the roaster until the connection has been inspected and confirmed correct.** |

## Installing the Chaff Cyclone

Position the Chaff Cyclone behind the roaster and secure the square opening at the top to the square hole on the back of the hood on top of the roaster as shown in the diagram below. There is no hardware needed to hold it in place.

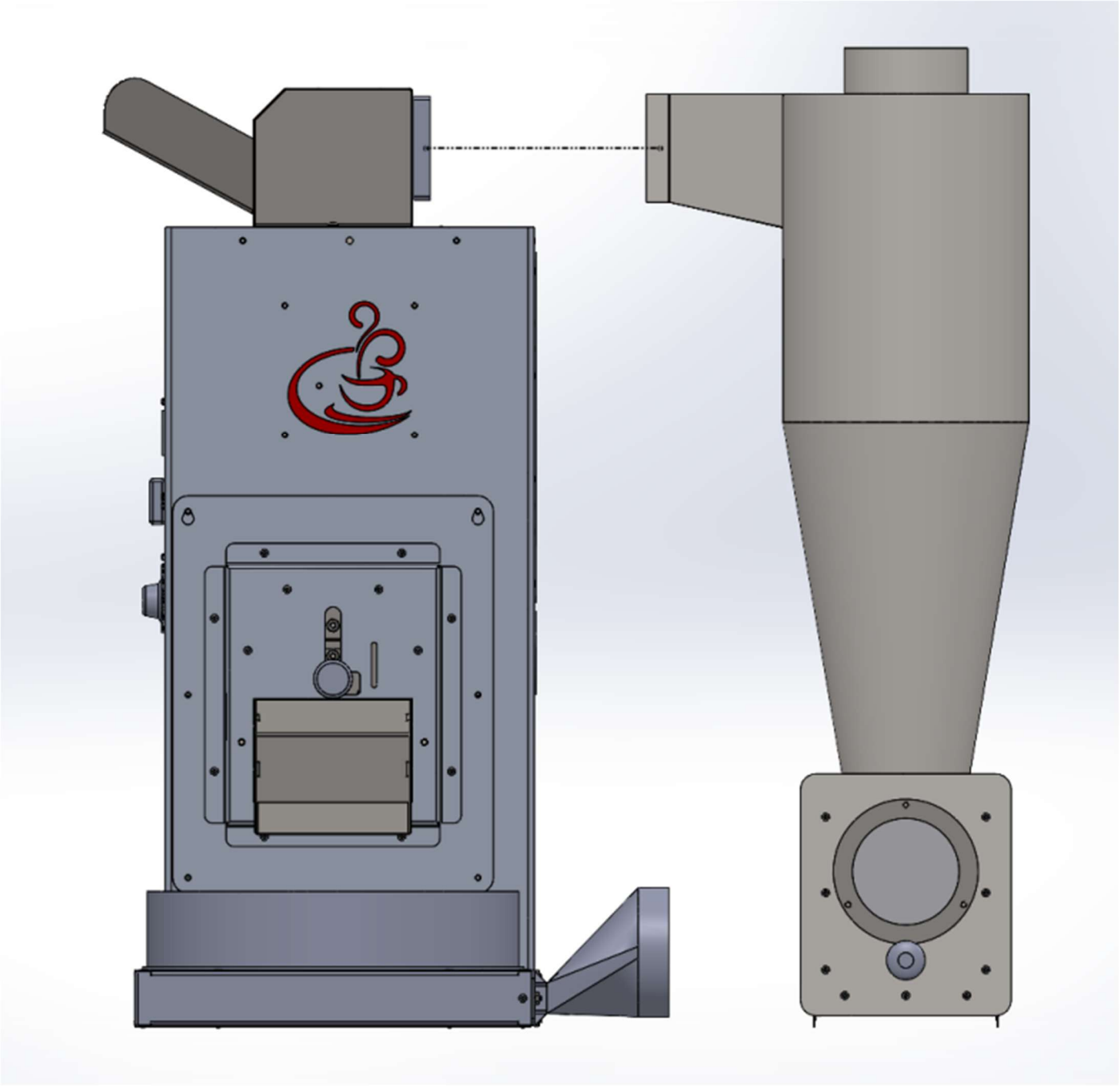

## Ducting from the Roaster/Bean Cooler to the Blower

The diagram below shows the complete ducting run connecting the roaster, bean cooler, and blower. Use the rigid ducting supplied in the Ducting Kit included with your roaster.

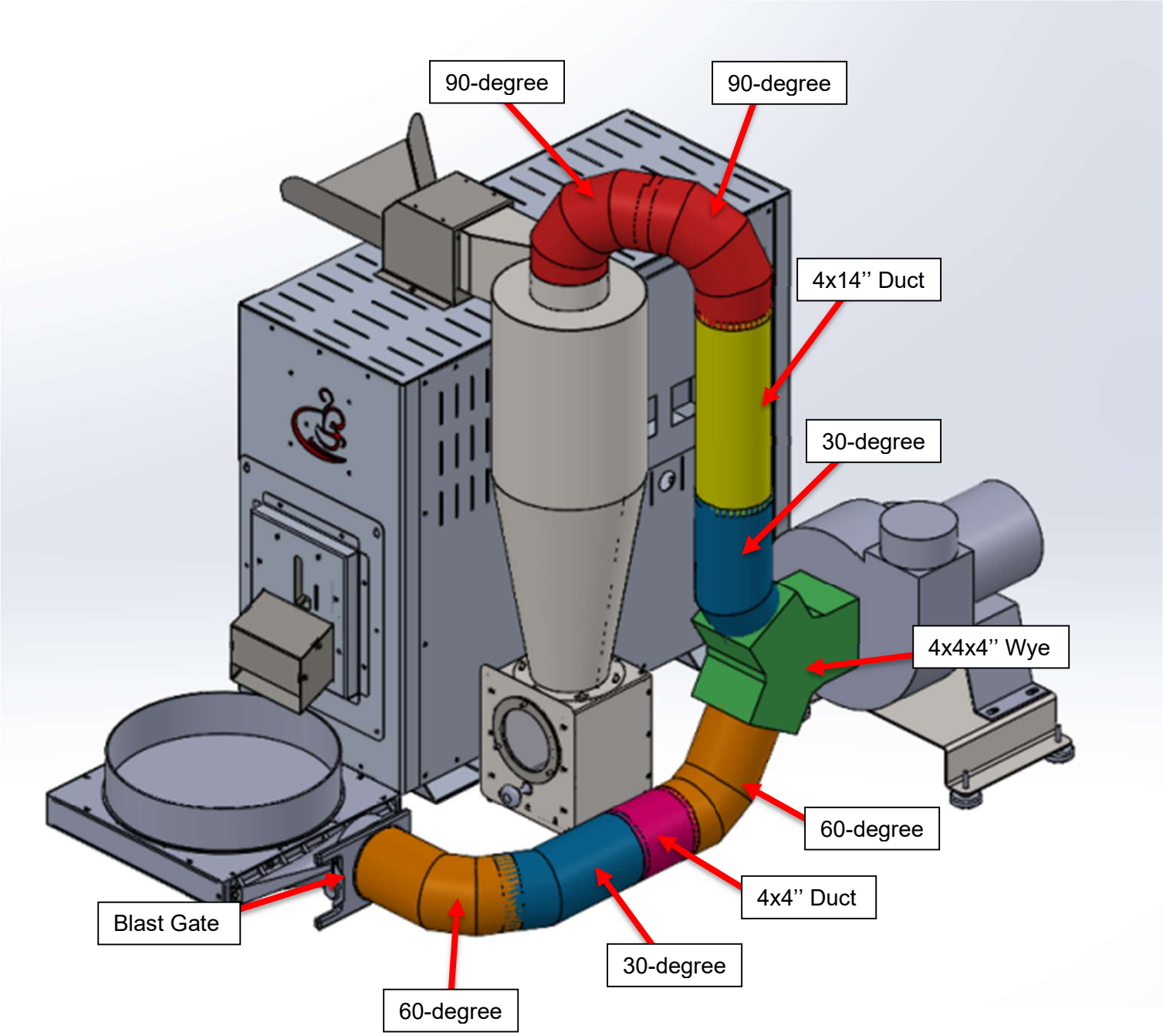

## Exhaust Ducting to the Outside

**NOTE:** Some installations may require longer runs to access a through wall fitting to the outside atmosphere. For longer runs please consult the outline below about lengths and deductions for elbows. The following information is for the ducting run from the exhaust blower to the outside.

To reduce noise in the roasting area, install the exhaust blower under an insulated enclosure or on the other side of a wall. The exhaust blower motor is air cooled so make sure to not seal it completely without an intake air source.

### Recommended Duct Length with Elbows

- 4-5'' exhaust duct runs should not exceed 25 feet. Deduct 5 feet for every 90-degree elbow in the run.

**Exhaust System**

Coffee Crafters recommends you use rigid ducting when connecting the blower exhaust discharge duct tothe building through fitting. 4- or 5-inch rigid ducting is preferred. Make sure to tape all duct joint seams from the exhaust discharge side of the blower to avoid smoke escaping into your roasting area. This part of the system is pressurized and will leak smoke through open seams. For maximum run lengths,consult the above section of this manual for specific ventilation instructions.

NOTE: If you plan to exhaust using a 5" metal dryer ducting, use a 5"to 4" reducer on the discharge side of the blower.

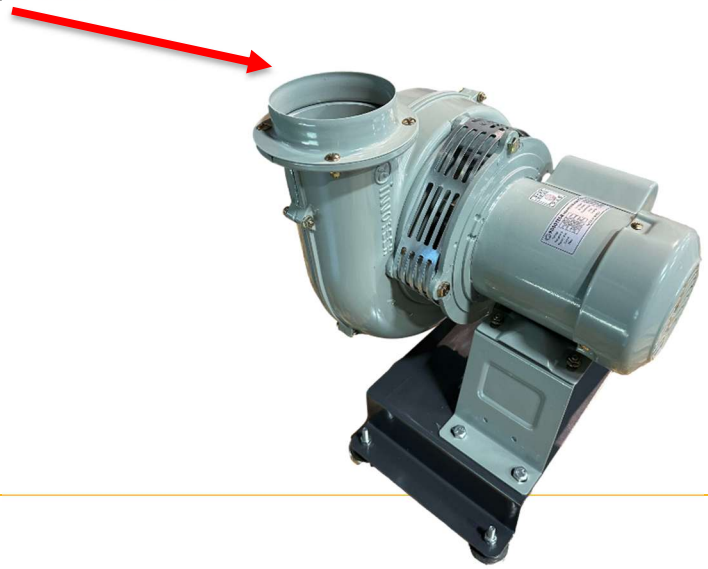

## Valenta 3 Deluxe Dimensions

When installed using the instructions provided in the previous pages of this manual, the entire roasting system can fit in a 45.1'' by 33.8'' space as shown below.

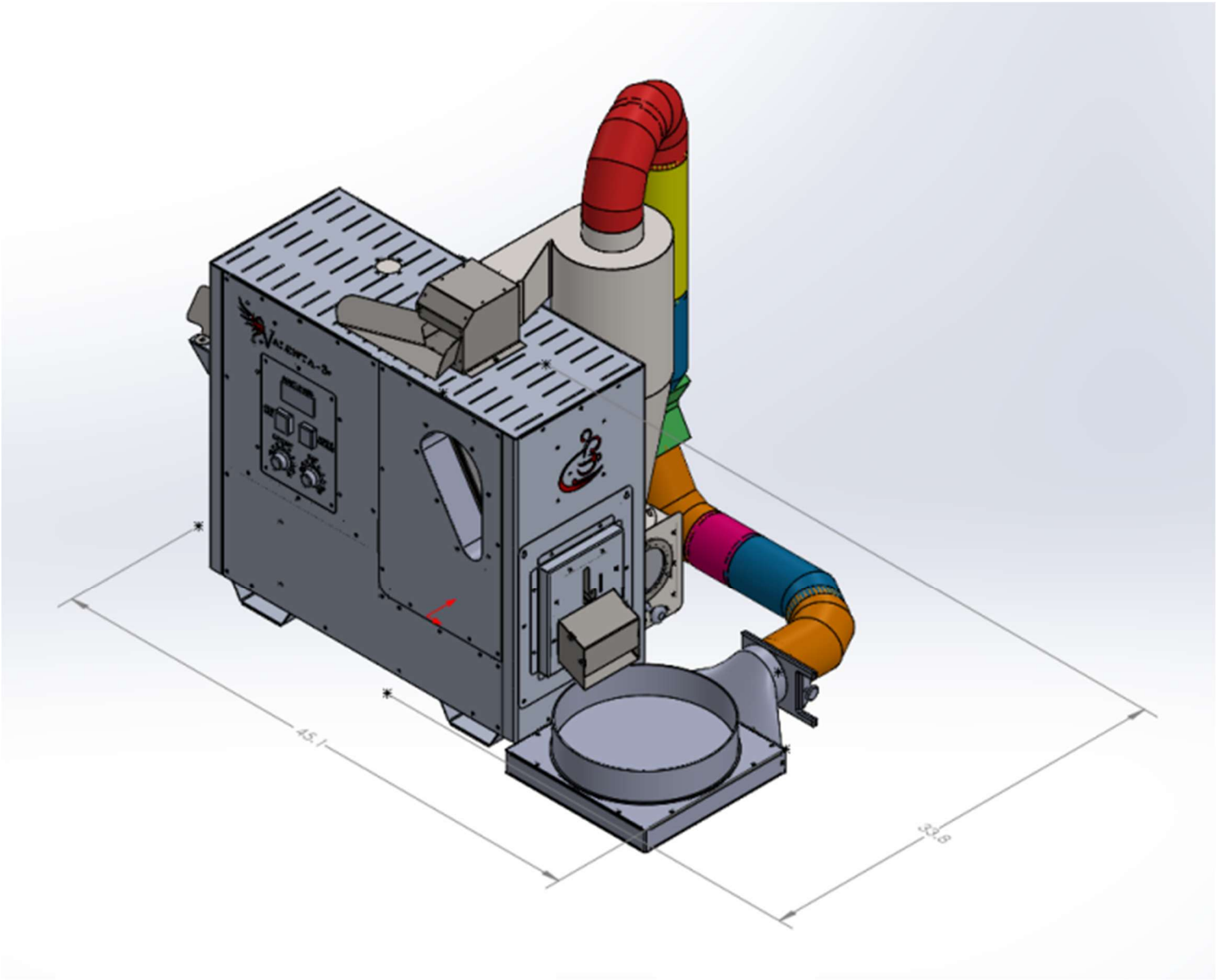


## Ventilation Installation

The Valenta 3 must be exhausted in accordance with the manufacturer's instructions in the previous section. The roaster exhaust system must be independent of all other systems.

## Exhaust & Ventilation Codes

| ⚠ WARNING | **Fire hazard.** An exhaust system that is installed incorrectly or not kept clean can carry a roaster fire into walls, ceilings, and the rest of the building. Install and maintain your exhaust system to these instructions and to every code that applies where you roast. |
|---|---|

The instructions in this manual are the minimum for safe operation. Your local codes may require more. Before you install, contact your local building department or fire marshal, called the Authority Having Jurisdiction (AHJ). The AHJ decides which codes apply to your roaster and whether you need a permit or inspection.

Codes your AHJ may apply include:

- **NFPA 96,** Standard for Ventilation Control and Fire Protection of Commercial Cooking Operations (current edition 2024). This is the main U.S. fire standard for commercial cooking exhaust ducts, fans, and clearances, and some jurisdictions apply it to coffee roasting.
- **Your local mechanical code,** usually the International Mechanical Code (IMC) or Uniform Mechanical Code (UMC) as adopted by your state or city.
- **Your local fire code,** usually the International Fire Code (IFC) or NFPA 1.
- **The International Building Code (IBC)** for any duct that passes through a fire-rated wall, floor, or ceiling.
- **Your regional air quality agency.** Some agencies require a permit or registration for coffee roasters, depending on batch size and pounds roasted per day.

Whatever codes apply, these rules always do:

1. Vent the roaster exhaust outdoors — never into a room, attic, crawl space, chimney, or another exhaust system.
2. Keep the roaster exhaust system completely separate from any other ventilation or exhaust system.
3. Use metal ducting only, as listed for your model, and seal all joints on the pressurized discharge side.
4. Keep ducting away from combustible materials, or use the clearance or protection your AHJ requires.
5. Provide cleanout access along the full duct run, from the blower discharge to the outside termination.
6. Inspect and clean the ductwork at least once a year, and more often with heavy use. Record each cleaning in the Cleaning Log.

In a commercial building, have a licensed mechanical contractor design and install the exhaust system, and tell your landlord and insurer before you install.

## Exhaust Penetrations

Any wall or ceiling penetration of ducts that carry roaster exhaust must meet the International Building Code fire-resistance rating and cannot be located within any fire-blocking or draft-stopping areas — unless the ductwork is constructed of galvanized steel or aluminum of a thickness specified in the International Building Code and the fire-resistance rating is maintained.

- Fire-blocking prevents movement of flame, smoke, and gases through concealed spaces — primarily vertical movement.
- Draft-stopping prevents movement of smoke and gases through concealed spaces — primarily horizontal movement.

## Cleanout

All ducting from the blower discharge to the outlet terminal must have a means for cleanout. Exhaust

duct cleaning is required for all coffee-roasting installations. Inspect exhaust tubing frequently; clean or replace if excessive buildup is present.

### Blower Ducting

- Use ONLY rigid ducting from the roaster to the blower intake and blower discharge to the outlet terminal.

| ⚠ CAUTION | The exhaust gas temperature must not exceed 170°F (76.6°C). |
|---|---|

## Light Installation

Remove the light kit from the box and the plastic sheath. Place the magnetic base on the designated spot on the top of the roaster (shown below) and direct the light beam into the roasting chamber. Position it as shown for optimum brightness inside the hopper.

| NOTICE | DO NOT put the light into the chute — this will cause the light to melt. Keep it at least 1-inch away from the hole at all times. |
|---|---|

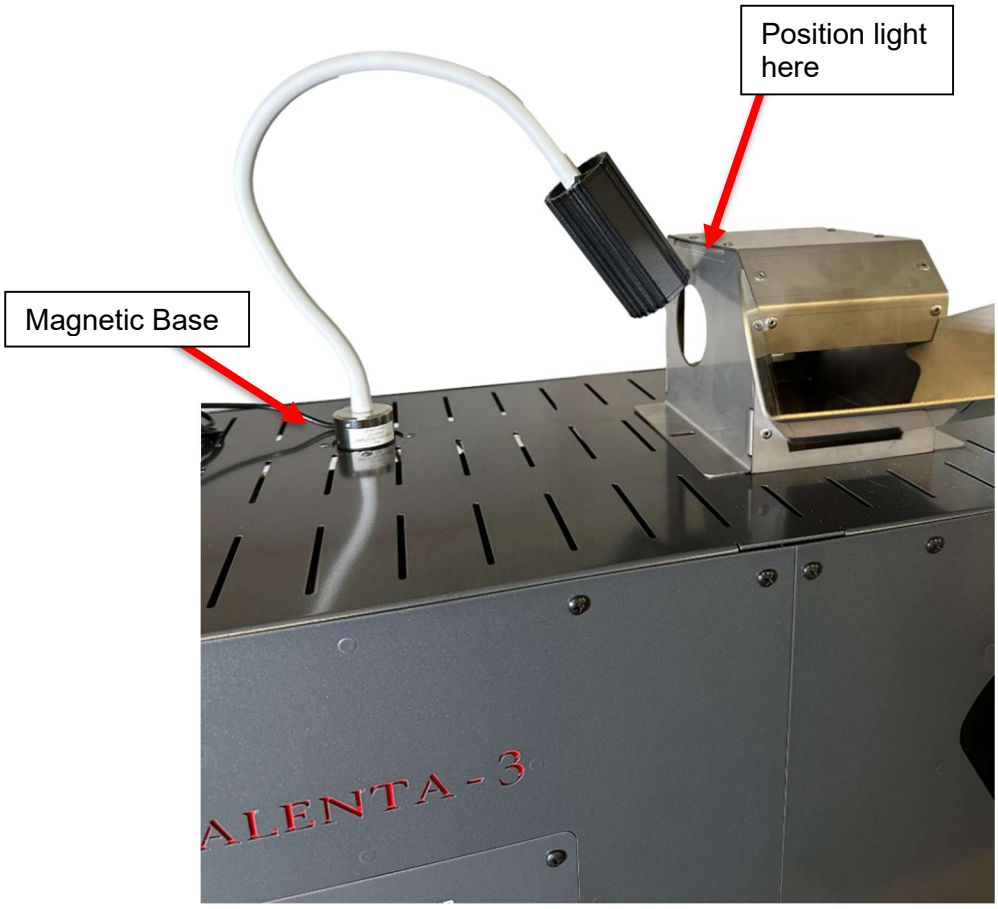

| | |
|---|---|
| **READY** | You are now ready to roast. Proceed to the Roasting section for initial testing and roasting instructions. |

## Temperature Switch

The following information originates from the manufacturer, LOVE.

Bulletin E-90-TCS

### Series TCS Thermocouple Switch

### Specifications - Installation and Operating Instructions

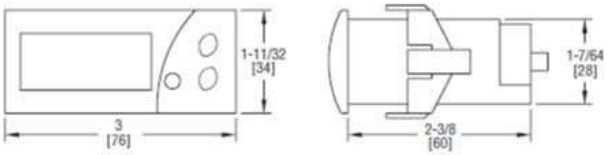


**Monitor and control temperature** in heating and cooling applications with the Series TCS Thermocouple Switch. The Series TCS offers a wide temperature range, two selectable alarm sets, and an internal buzzer indicating alarm condition or error. The user can define set point, heating/cooling regulation, cycle time, alarm configuration, load status, and ambient probe adjustment. The thermocouple switch features password protection and error/alarm messaging. Temperature and output status is indicated on the bright red LED display. Use the configuration key (sold separately) to quickly program multiple units. The Series TCS includes a fitting clip for panel mounting, gasket, rear terminal cover and instruction manual.

**INSTALLATION**

**Note:** Unit must be mounted away from vibration, impacts, water and corrosive gases.

- Cut hole in panel 2.80 x 1.14 inches (71 x 29 mm).
- Apply silicone (or rubber gasket) around the perimeter of the hole to prevent leakage.
- Insert unit into hole of panel.
- Slide removable fitting clips onto unit from the back until secure to panel.
- Remove back cover to wire unit.
- Wiring diagram is displayed on the top of the unit.
- (Note: PROBE CABLE LENGTH MUST NOT EXCEED 238 ft (100 m). DO NOT INSTALL PROBE CABLE NEAR POWER CABLES).
- Replace cover once wiring is complete.

**SPECIFICATIONS**

**Probe Range:** 32 to 999°F (0 to 700°C) for Type J thermocouple; 32 to 999°F (0 to 999°C) for Type K or S thermocouples.
**Input:** Type J, K or S thermocouple.
**Output:** SPDT relay rated 16A @ 240 VAC resistive.
**Horsepower Rating (HP):** 1 HP.
**Control Type:** ON/OFF.
**Power Requirements:** 115 VAC, 230 VAC, 12 VAC/VDC or 24 VAC/VDC (depending on model).
**Accuracy:** ±1% FS.
**Display:** 3-digit, red, 1/2" (12.7 mm) digits, plus sign.
**Resolution:** 1°.
**Memory Backup:** Nonvolatile memory.
**Temperature Limits:**
Ambient: 32 to 158°F (0 to 70°C);
Storage Temperature: -4 to 176°F (-20 to 80°C).
**Weight:** 2.3 oz (65 g).
**Front Panel Rating:** IP64.
**Agency Approvals:** CE, cUR, UR.

**WIRING DIAGRAM**

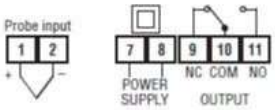


©Copyright 2014 Dwyer Instruments, Inc. Printed in U.S.A. 2/14 FR# R0-443801-00 Rev.1

**LOVE CONTROLS DIVISION**
**DWYER INSTRUMENTS INC.**
**P.O. BOX 338 - MICHIGAN CITY, INDIANA 46360, U.S.A.**

**Phone: 219/879-8000 www.love-controls.com**
**Fax: 219/872-9057 e-mail:love@love-controls.com**

## Helpful Tips

- See the Cleaning & Sanitation Guide (Section 3) for proper cleaning of the Valenta 3.
- Visit our YouTube Channel for roasting tips, troubleshooting instructions, and more: YouTube.com/CoffeeCraftersLLC

SECTION 7

# Roasting

Before roasting your first batch, orient yourself with proper safety procedures. Treat your roaster the same way you would a cook-top range. During the roast, the hopper viewing ports get as hot as any pot on your stove, and the air that roasts your coffee reaches temperatures over 500°F.

| | |
|---|---|
| ⚠ WARNING | **Coffee roasting produces heat, chaff dust, and hot oil residue — all fire risks if the equipment is misused or poorly maintained. Keep the area around the roaster clear of combustible materials, never operate in an enclosed space without proper ventilation, and keep a fire extinguisher rated for the space nearby whenever the roaster is running.** |
| ⚠ WARNING | **Never leave your roaster unattended while roasting. If you lose your bean loft, you will ruin your batch and may damage the roaster. Coffee beans can catch fire if they stop circulating.** |

## Roast Coffee in 6 Easy Steps

- Check the chaff drawer on the cyclone
- Turn on the exhaust blower
- Turn on the system power switch
- Set the bean loft
- Load beans into the hopper through the hood with the bean loader
- Turn on the heating element

### Step 1 — Check the Chaff Cyclone

Ensure the chaff cyclone drawer is secured in place and empty before roasting.

| | |
|---|---|
| ⚠ WARNING | **Chaff cyclone drawers can catch fire when they are not cleaned regularly. Inspect and empty the drawer every time you roast, and never let chaff build up near the roaster.** |

### Step 2 — Turn On the Exhaust Blower

Never run your roaster without the exhaust blower running. The blower keeps the machine cool and prevents chaff, smoke, and heat from venting into your roast area. The on/off switch is located on the front or side of the blower motor.

| | |
|---|---|
| ⚠ WARNING | **Do not operate your roaster without the exhaust blower running. Running without the blower allows heat, smoke, and chaff to build up in the roaster and the roasting area, and is a fire hazard as well as a warranty violation.** |
| NOTE | If this is your first roast of the day, preheat the Valenta 3 by turning the loft to 3 and the heat to 10 until the roast air temperature reads 450°F (usually about 1 minute).<br><br>It is also a good idea to only roast 1-2 lbs on your first roast of the day to keep your roast times consistent. Every roast after the first one can be a full 3 lbs without limitations. |

## Step 3 — Turn On the System Power Switch

The system power switch is the single red switch on the left. As a safety feature, the heating elements cannot be turned on while the system power switch is in the off position.

## Step 4 — Set the Bean Loft

The bean-loft blower knob is marked 1-10. Slowly turn up the air by rotating the knob clockwise. Practice several times before turning on the heat so you become familiar with the feel of changing the loft setting.

| | |
|---|---|
| ⚠ WARNING | **Coffee beans must keep moving at all times. Never load beans into the hopper until you have established the loft, and never allow the beans to stop circulating while the heating element is on — beans that stall against hot surfaces will scorch and can catch fire.** |

Set the loft slightly higher while loading the beans, then turn it down slightly once the beans are in the hopper so they settle into their roasting cycle. See the recommended settings on the next page.

| | |
|---|---|
| ⚠ WARNING | **In the event of a loft motor failure (including a complete power outage), immediately turn OFF the roaster power and dump the coffee beans into the cooling tray.** |

We also have an instructional video on setting the bean loft which you can find on our YouTube channel or by using the QR code below:

## Step 5 — Load Beans in the Top Hopper

Make sure your air-loft adjustment is on before pouring in the beans. Lift the hood up and pour the beans down the loading chute. We recommend a food-grade bucket that holds 3 lbs of green beans for the pouring process.

## Step 6 — Turn On the Heating Element

Turn on the heating element and use the heat control to set the heat for your batch size. Use the recommended settings below as a starting point.

### Roasting Recommendations

| Batch Size (lbs) | Loading Loft | Roasting Loft | Heat Setting |
|---|---|---|---|
| **1** | 3.5 | 2.75 | 5 |
| **2** | 5 | 3 | 7 |
| **3** | 6 | 3.5 | 10 |
| **NOTE** | *These are very generalized recommendations only and vary based on altitude, humidity, line voltage, bean density and ambient air temperature. ALWAYS set your loft level by sight, ensuring bean movement at all times.<br>**If roasting below a 1/2 lb batch, the bean temperature may not read accurately. | | |

You can increase or decrease the heat setting to reach the temperature you need. Roasting times vary with room temperature and whether the machine is warm or cold. Always monitor the batch, never leave it unattended, and watch the bean temperature to achieve your desired roast. You will quickly learn which settings work best for your style.

## Cooling the Beans

Coffee beans must be cooled quickly after they reach your desired temperature.

**Pull the cooling tray knob out for cooling.** Open it before dumping roasted beans and close it after the cooling cycle.

With the beans in the cooling tray, stir occasionally with a stainless-steel spoon so no hot spots remain in the corners. This is also a good time to check for rocks or foreign objects. Cooling takes about 1 minute for smaller loads and about 2-3 minutes for larger loads.

Once cooled, return the cooling knob to its original position by closing the air tube under the perforated tray. The tray is designed to be removed for easy pouring of roasted beans.

SECTION 8

# Coffee Bean Education

## Proper Storage of Green Coffee Beans

The two most important variables for storing green beans are humidity and temperature. Green beans store well for over two years when kept properly.

### Good Practices

- Store beans at a stable temperature between 50°F and 85°F. If the temperature is comfortable for you, it is comfortable for your beans
- Keep beans off the ground — store on a pallet. This promotes air circulation and prevents condensation
- Keep beans away from pets
- Keep beans away from sinks and water sources
- For smaller quantities, food-grade buckets with gamma-seal lids work well and provide an airtight seal
- Vacuum-sealed bags are an excellent, though more expensive, option — packed beans require less monitoring because they are not exposed to oxygen or atmospheric moisture

### Things to Avoid

- High humidity
- Significant temperature swings
- Direct sunlight

SECTION 9

# Maintenance & Troubleshooting

Your roaster requires periodic maintenance and cleaning. The exact schedule depends on how much coffee you roast and how dark you roast your beans (because darker roasts produce significantly more smoke and oil residue). All wiring is color-coded and labeled, and videos demonstrating how to replace most serviceable components are available on the Coffee Crafters YouTube channel. Your serial number is on the top of the power distribution block on the back of the machine — please include it when contacting us.

## Maintenance

### Chaff Cyclone

Inspect the condition of the chaff cyclone and drawer every time you roast. Suction works best when the drawer is less than half full and clean. Empty your drawer often. When the drawer becomes heavily coated in chaff dust, brush or wipe it clean and vacuum any remaining debris.

### Roast Hopper Cleaning

Refer to Section 3 of the manual for cleaning instructions.

### Bean Cooling Tray

With use — especially with darker roasts — you will notice oil buildup inside the cooling tray. Remove the tray and wash with warm soapy water, rinsing and drying well. While the tray is out, clean any beans that have fallen into the cooling void beneath it; vacuum the dust and beans, then wipe the area with a damp cloth.

### Mast Tubing

Replace or clean your ducting when dirty. Check this by removing the duct on the upper chaff collector. The blower can be mounted on either side of the roaster as you see fit.

### Exhaust Tubing

You will need to access the inside of the solid exhaust tubing to run a brush down the interior. If you have elbows in your exhaust line, you may need to take the line apart to fully clean it.

After cleaning the solid tubing, inspect the inside of your blower before reinstalling. Brush over each fin on the inside of the blower. Once everything is reattached, turning on the blower will clear remaining debris.

How often you clean or replace tubing depends on how many pounds you roast daily. Chaff dust buildup is a fire hazard — when the inside of the tubing is completely coated with dust, clean or replace it.

| | |
|---|---|
| ⚠ WARNING | **Dirty exhaust systems cause fires. Chaff and oil residue inside the ducting are combustible. Always unplug the exhaust blower before performing any cleaning or maintenance on the exhaust tubing, and clean the run on a regular schedule rather than waiting for visible buildup.** |

## Exterior Surfaces

Wipe the lid with a damp cloth. Never use an overly wet towel — excess liquid could damage electrical components. The body can be washed with a damp cloth or mild detergent. Do not use industrial spray cleaners or degreasers on your roaster.

## Troubleshooting Guide

This section provides guidance for roaster owners and/or qualified repair persons. The most common mechanical and operational issues are addressed below. The Valenta 3 is a very reliable machine, but like all mechanical devices, things can go wrong. When ordering replacement parts, refer to the Part List and include your machine serial number, found on the top of the power distribution block on the back of the machine.

| ⚠ WARNING | **Always unplug the roaster and let all components cool before removing any panel or working on internal wiring, switches, contactors, or the heating elements. Working on the roaster while it is powered on or still hot is a fire and shock hazard. If you are not comfortable performing electrical troubleshooting, contact Coffee Crafters or a licensed electrician.** |
|---|---|

| PROBLEM | CAUSE(S) | SOLUTION |
|---|---|---|
| **Exhaust blower loses suction** | **1.** The chaff drawer is dirty or not closed all the way.<br>**2.** An obstruction in the vent pipe.<br>**3.** The bean cooler blast gate is open. | **1.** Empty the chaff drawer and ensure it is completely closed.<br>**2.** Check the vent pipe from the blower discharge through the wall fitting. Remove the obstruction or replace damaged duct pipe.<br>**3.** Close the bean cooler blast gate while roasting. |
| **Bean loft motor won't start** | **1.** System power switch is off.<br>**2.** Faulty system power switch.<br>**3.** SSR-25 has failed.<br>**4.** Faulty potentiometer.<br>**5.** Tripped system power fuse. | **1.** Ensure the system power switch is on.<br>**2.** Check switch voltage in the on position. If no voltage, replace the switch.<br>**3.** Check SSR-25 voltage output. If none, replace SSR-25.<br>**4.** Check the motor speed control potentiometer for linear resistance. If ohms do not drop to 0 when turned all the way up, replace it.<br>**5.** Check for a tripped system power fuse on the back of the machine.<br>*A tripped fuse indicates a fault in the system. If it will not reset, call the manufacturer.* |
| **Elements won't turn on** | **1.** Heat element switch failed.<br>**2.** Faulty connector on the input side of the heat switch.<br>**3.** Temperature controller setting.<br>**4.** Faulty temperature controller. | **1.** Replace the heat element switch.<br>**2.** Replace the connector and heat switch.<br>**3.** Check the roast air temperature setting — it must be higher than your desired ending bean temperature.<br>**4.** Replace the temperature controller.<br>*The system power switch supplies power to the heat switches when on. If elements do not come on when the heat switch is on, check the voltage on the switch output (center terminal). If none, replace the switch.* |
| **Loft motor runs at full speed only** | **1.** SSR-25 has failed.<br>**2.** Motor speed control potentiometer has failed. | **1.** Replace SSR-25.<br>**2.** Replace the motor speed control potentiometer. |

| PROBLEM | CAUSE(S) | SOLUTION |
|---|---|---|
| **Both elements run but roasts take too long** | **1.** Ambient air temperature too low.<br>**2.** Low line voltage. | **1.** Roast smaller loads until you identify the maximum load size where the machine reaches optimum roast air temperature.<br>**2.** Install a buck-boost transformer.<br>*Roasting below 50°F increases roast times — roast in an enclosed, heated environment in cold weather. The roaster does not perform well below 235 line volts under load. Have a qualified electrician check your line voltage under load.* |
| **Air coming out of the dump gate** | **1.** Dump gate needs adjusting.<br>**2.** Door gasket needs replacing. | **1.** Adjust the tension on the dump gate handle by move the locking hook down. There are two screws holding the hook in place which you can loosen and adjust.<br>**2.** Door gaskets are a consumable part and will wear out over time. Replacements can be purchased on our website, CoffeeCrafters.com. |

## Figure 1.1 — Electrical Panel with Back Panel Removed

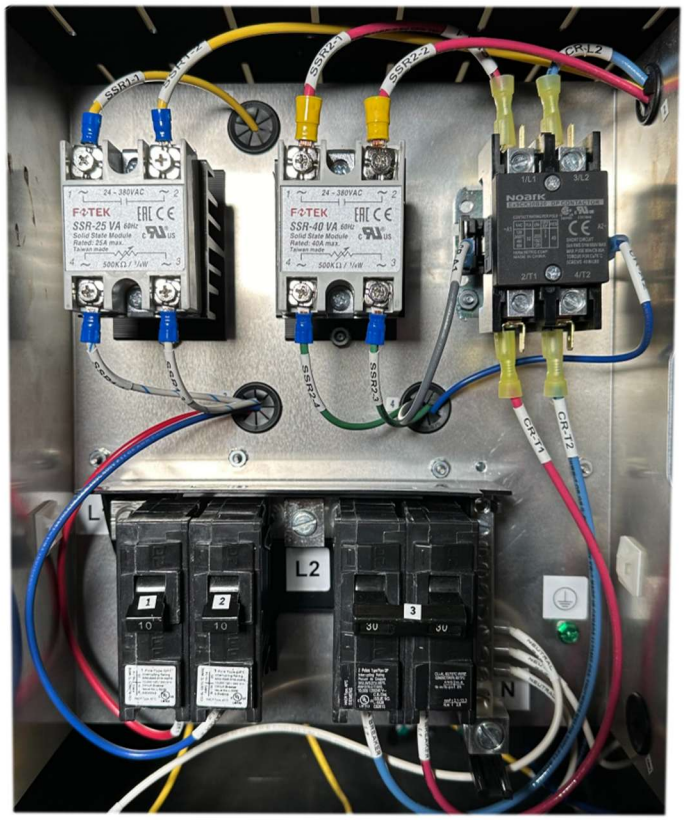


## Figure 1.2 — Controller Wiring Beneath the Lid

## Figure 1.3 — SSR & Contactor Connections

Note: the SSRs are installed with the writing upside down. Potentiometer connections are on top; power connections are on the bottom.

**SSR-25 — Motor Speed Control Module**

**SSR-40 — Heat Control Module**

**Noark Contactor**

## Wiring Diagram — USA (240V, 40A Single Phase)

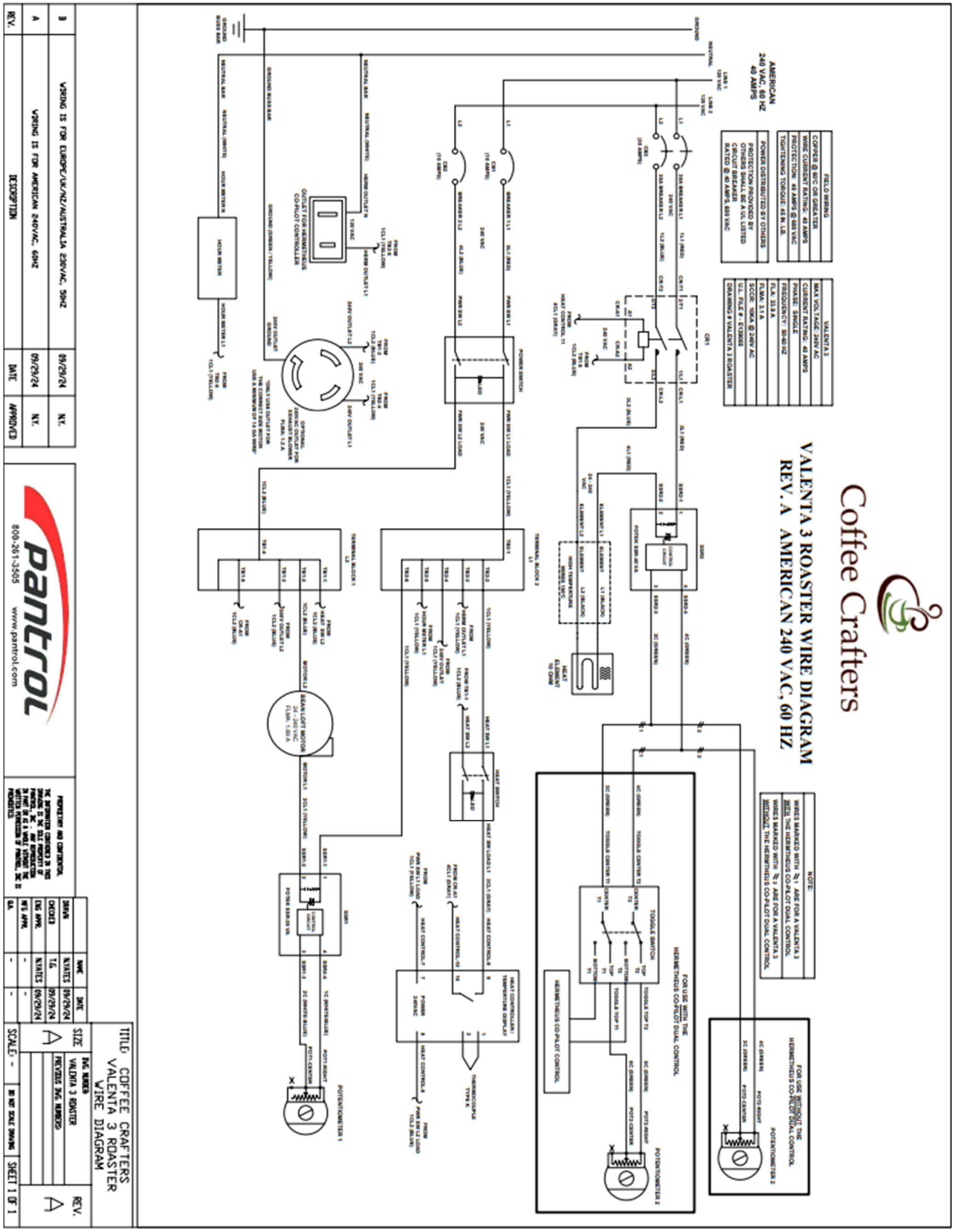

## Wiring Diagram — European (220V, 40A Single Phase)

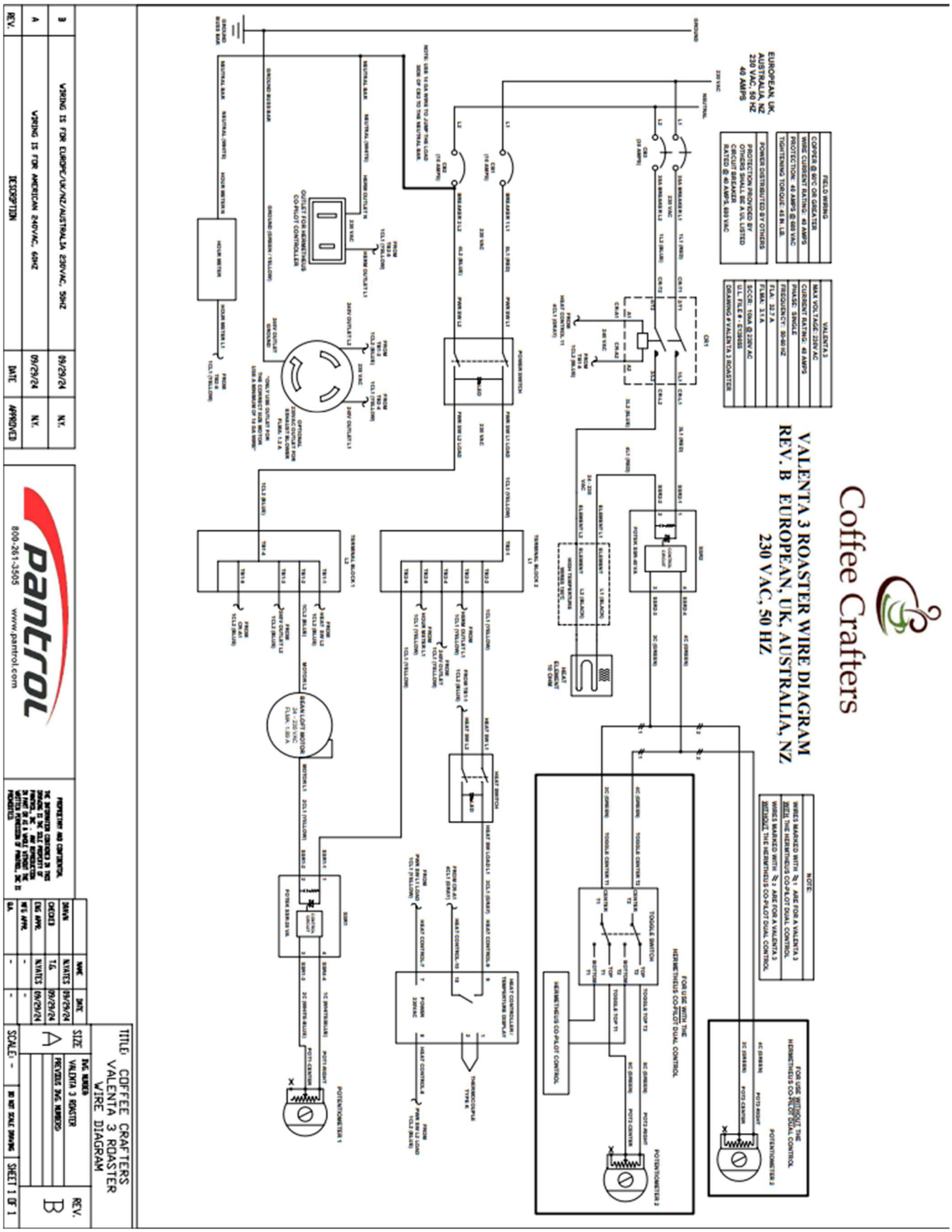

REFERENCE

# Part List

| Part Name | Part Number |
|---|---|
| Bean Temperature Probe (21″) | WRN-535-1000 |
| Digital Thermometer | SK-86460-03 |
| Door Gasket | V3-RCA-112 |
| Double Potentiometer (heat) | R-VA2XXL 500K |
| Fotek SSR-25 | SSR 25-VA 1/4 watt |
| Fotek SSR-40 | SSR-40VA |
| Heat Element | CC-HCART Mini |
| Loading Chute | V7-LC-1000 |
| Loft Motor | 116310-01 blower A2 |
| Loft Motor Brushes | 70989917/833508-50 |
| Noark Contactor | EX9CK30B20 |
| Roast Air Temp. Probe | WRN-535-1200 |
| Roast Chamber Mount Gasket | V7-RC-1000 |
| Roaster Light | JT1MCJSGP pinyuan_JC8001 |
| Sight Glass Bezel | PA6-GF |
| Single Potentiometer (loft) | 023-638 |
| Starter Capacitor | #24-3 capacitor chansen |
| Switch x2 | KCD4 30A |
| Temperature Controller | TCS-4020 |
| Thermometer | SK-86460-03 |
| Thermometer Bracket | A9-HTM-1000 |
| Thermometer Bracket Base | V7-TMB-1000 |
| Wye Duct | ACy444 |